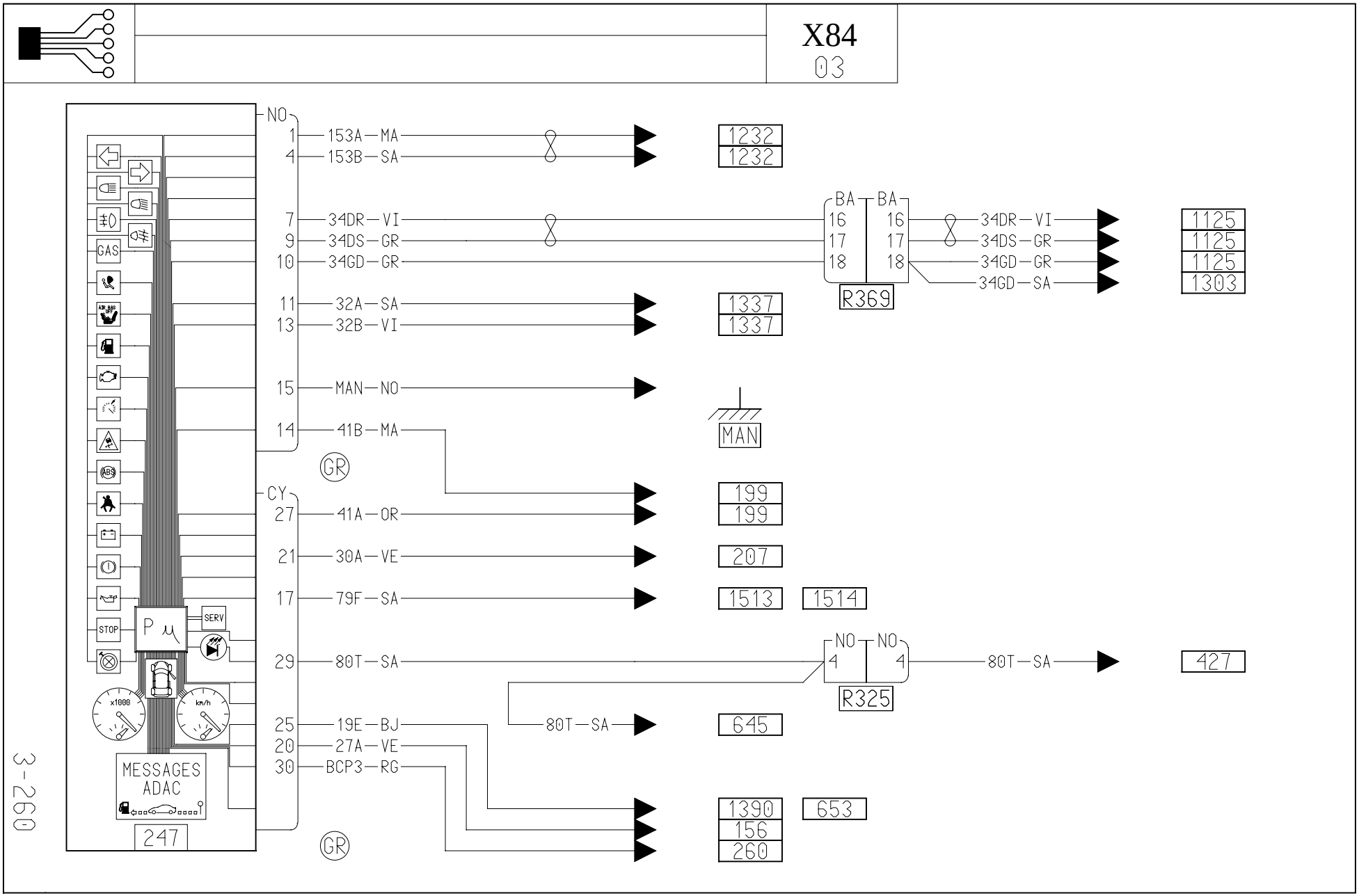
X84
03
NO
1 153A—MA
4 153B—SA
1232
1232
7 34DR—VI
9 34DS—GR
10 34GD—GR
BA 16 17 18
BA 16 17 18
R369
34DR—VI
34DS—GR
34GD—GR
34GD—SA
1125
1125
1125
1303
11 32A—SA
13 32B—VI
1337
1337
15 MAN—NO
14 41B—MA
MAN
GR
CY
27 41A—OR
199
199
21 30A—VE
207
17 79F—SA
1513
1514
29 80T—SA
NO 4
NO 4
R325
80T—SA
427
80T—SA
645
25 19E—BJ
20 27A—VE
30 BCP3—RG
1390
156
260
653
GR
GAS
STOP
SERV
x1000
km/h
MESSAGES
ADAC
247