SSABS/SCTFDR/NINAV3/RAD03/BVA4
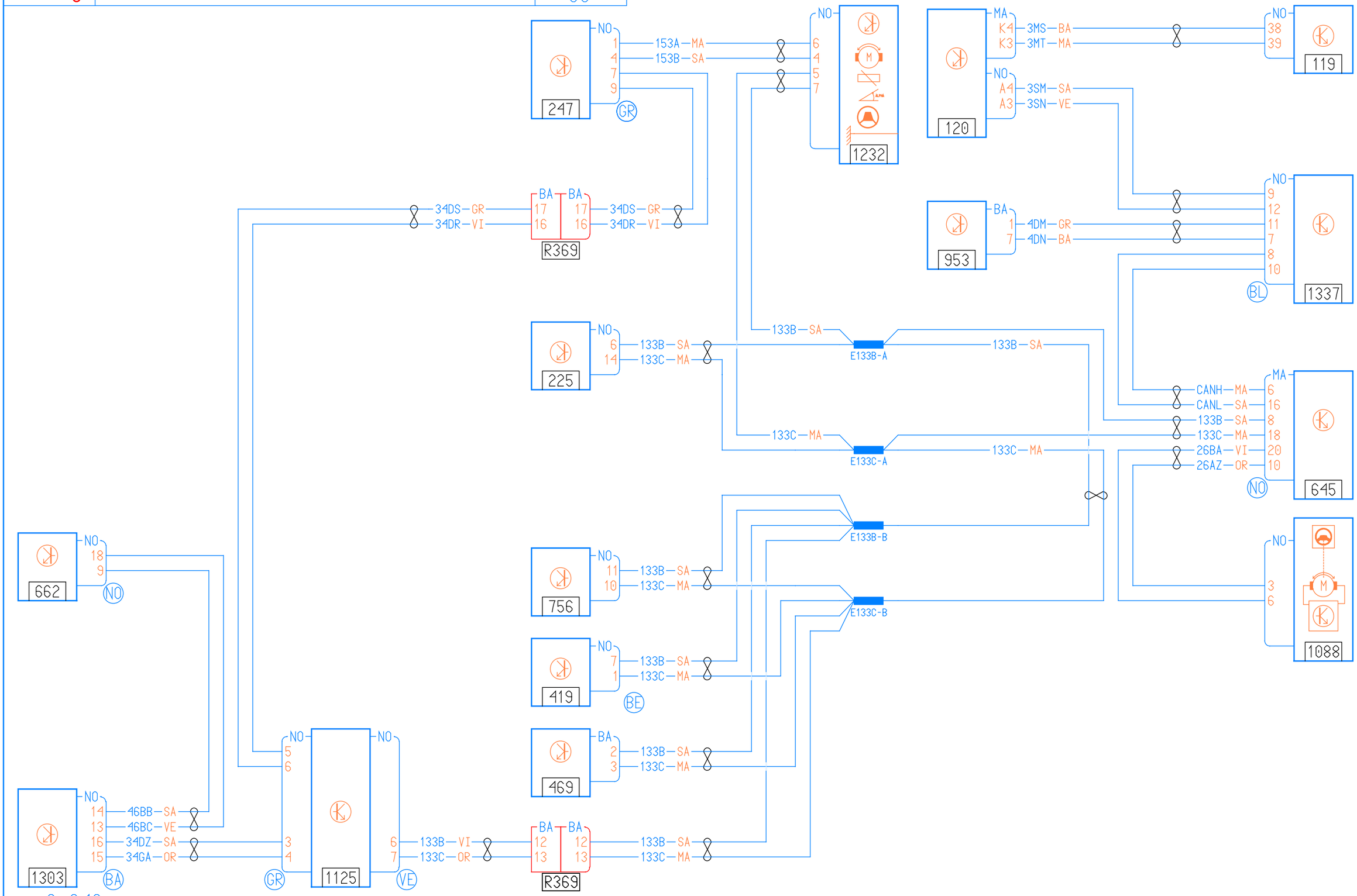
X84
03