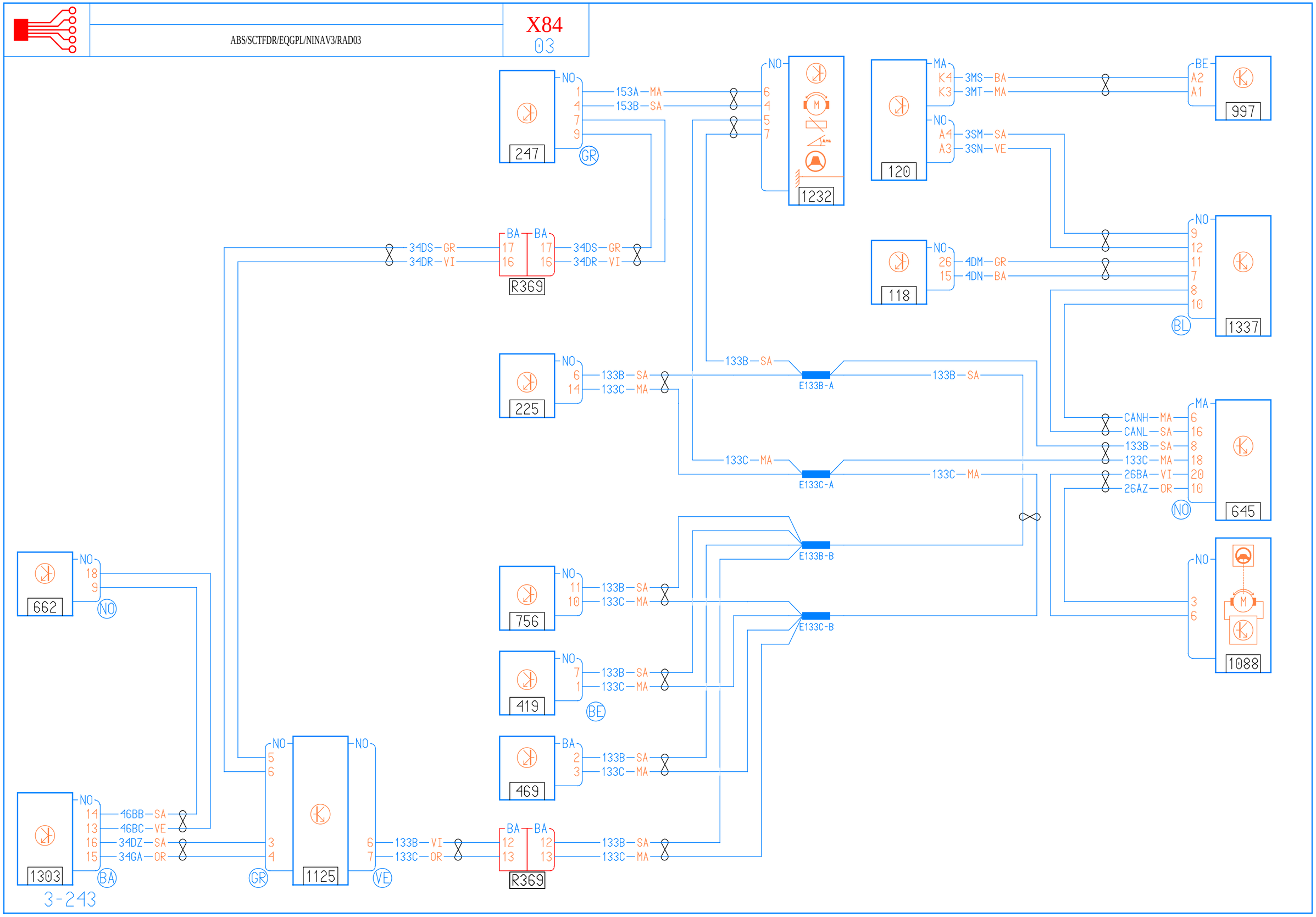
ABS/SCTFDR/EQGPL/NINAV3/RAD03
X84
03
247
153A—MA
153B—SA
1232
120
3MS—BA
3MT—MA
997
3SM—SA
3SN—VE
34DS—GR
34DR—VI
R369
118
4DM—GR
4DN—BA
1337
225
133B—SA
133C—MA
E133B-A
E133C-A
645
CANH—MA
CANL—SA
26BA—VI
26AZ—OR
E133B-B
E133C-B
662
756
419
469
1088
1303
46BB—SA
46BC—VE
34DZ—SA
34GA—OR
1125
133B—VI
133C—OR
3-243