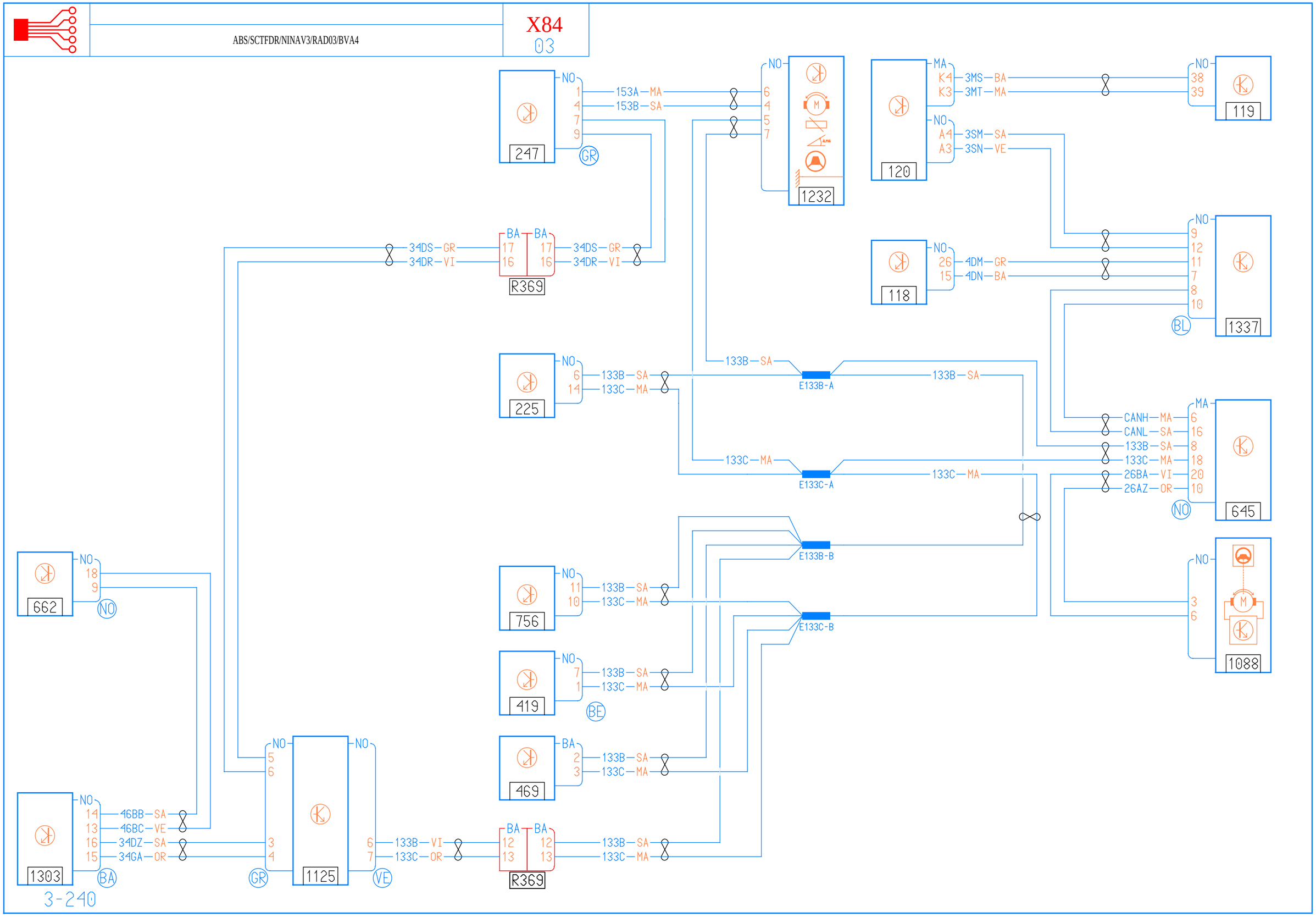
ABS/SCTFDR/NINAV3/RAD03/BVA4
X84
03
247
153A—MA
153B—SA
GR
1232
120
3MS—BA
3MT—MA
3SM—SA
3SN—VE
119
118
4DM—GR
4DN—BA
1337
BL
34DS—GR
34DR—VI
R369
225
133B—SA
133C—MA
E133B-A
E133C-A
CANH—MA
CANL—SA
26BA—VI
26AZ—OR
645
NO
662
756
419
BE
469
E133B-B
E133C-B
1088
1303
46BB—SA
46BC—VE
34DZ—SA
34GA—OR
BA
1125
133B—VI
133C—OR
VE
3-240