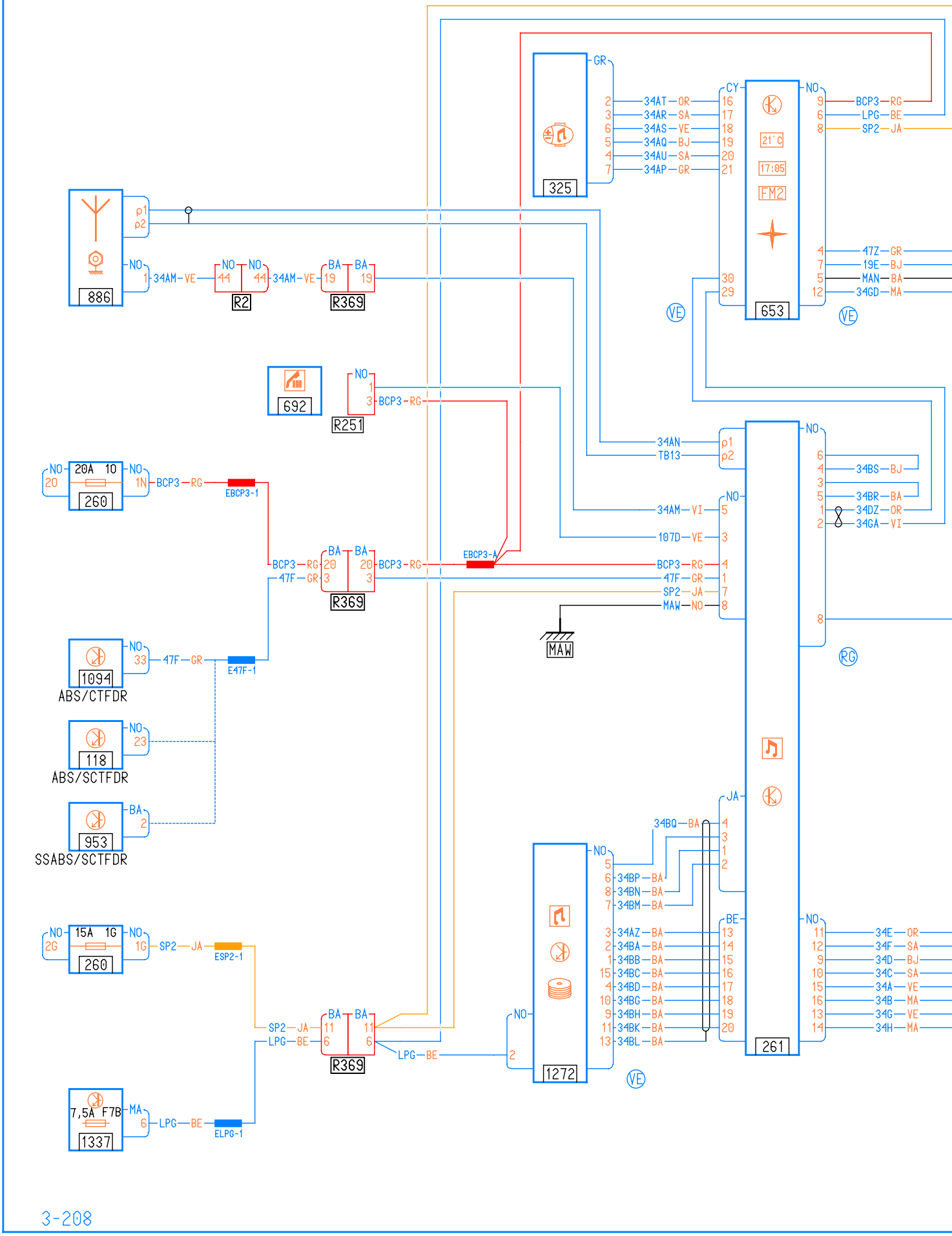
886
R2
R369
325
653
692
R251
260
EBCP3-1
EBCP3-A
1094
ABS/CTFDR
E47F-1
118
ABS/SCTFDR
953
SSABS/SCTFDR
ESP2-1
1337
ELPG-1
MAW
1272
261
34AT—OR
34AR—SA
34AS—VE
34AQ—BJ
34AU—SA
34AP—GR
BCP3—RG
LPG—BE
SP2—JA
47Z—GR
19E—BJ
MAN—BA
34GD—MA
34AM—VE
BCP3—RG
47F—GR
34AN
TB13
34AM—VI
107D—VE
SP2—JA
MAW—NO
34BS—BJ
34BR—BA
34DZ—OR
34GA—VI
34BQ—BA
34BP—BA
34BN—BA
34BM—BA
34AZ—BA
34BA—BA
34BB—BA
34BC—BA
34BD—BA
34BG—BA
34BH—BA
34BK—BA
34BL—BA
34E—OR
34F—SA
34D—BJ
34C—SA
34A—VE
34B—MA
34G—VE
34H—MA
LPG—BE
VE
RG

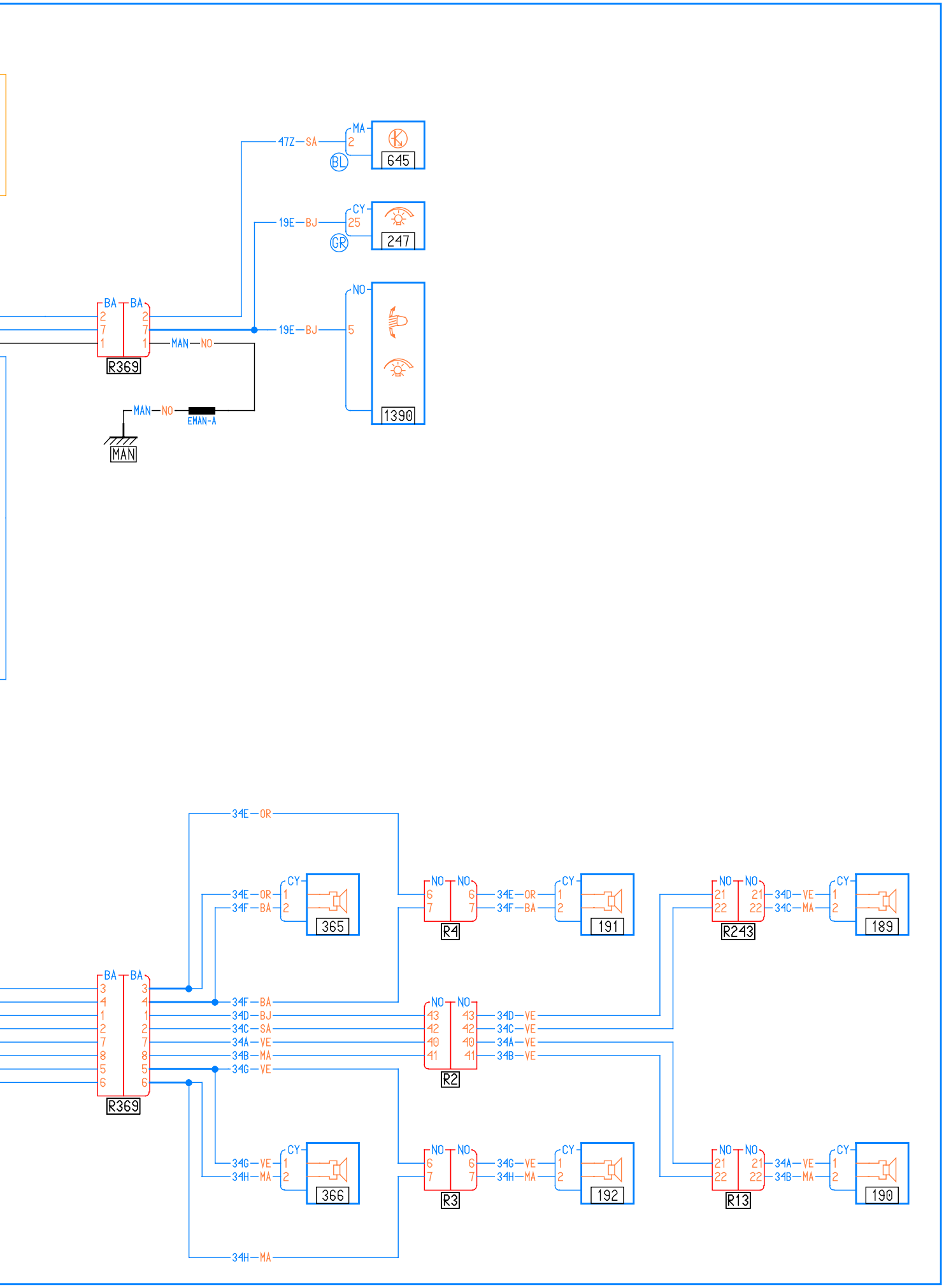
47Z—SA
MA
2
BL
645
19E—BJ
CY
25
GR
247
NO
5
1390
19E—BJ
BA
2
7
1
R369
MAN—NO
MAN—NO
EMAN-A
MAN
34E—OR
34F—BA
365
R4
191
R243
189
34D—VE
34C—MA
34F—BA
34D—BJ
34C—SA
34A—VE
34B—MA
34G—VE
R2
34G—VE
34H—MA
366
R3
192
R13
190
34A—VE
34B—MA
34H—MA