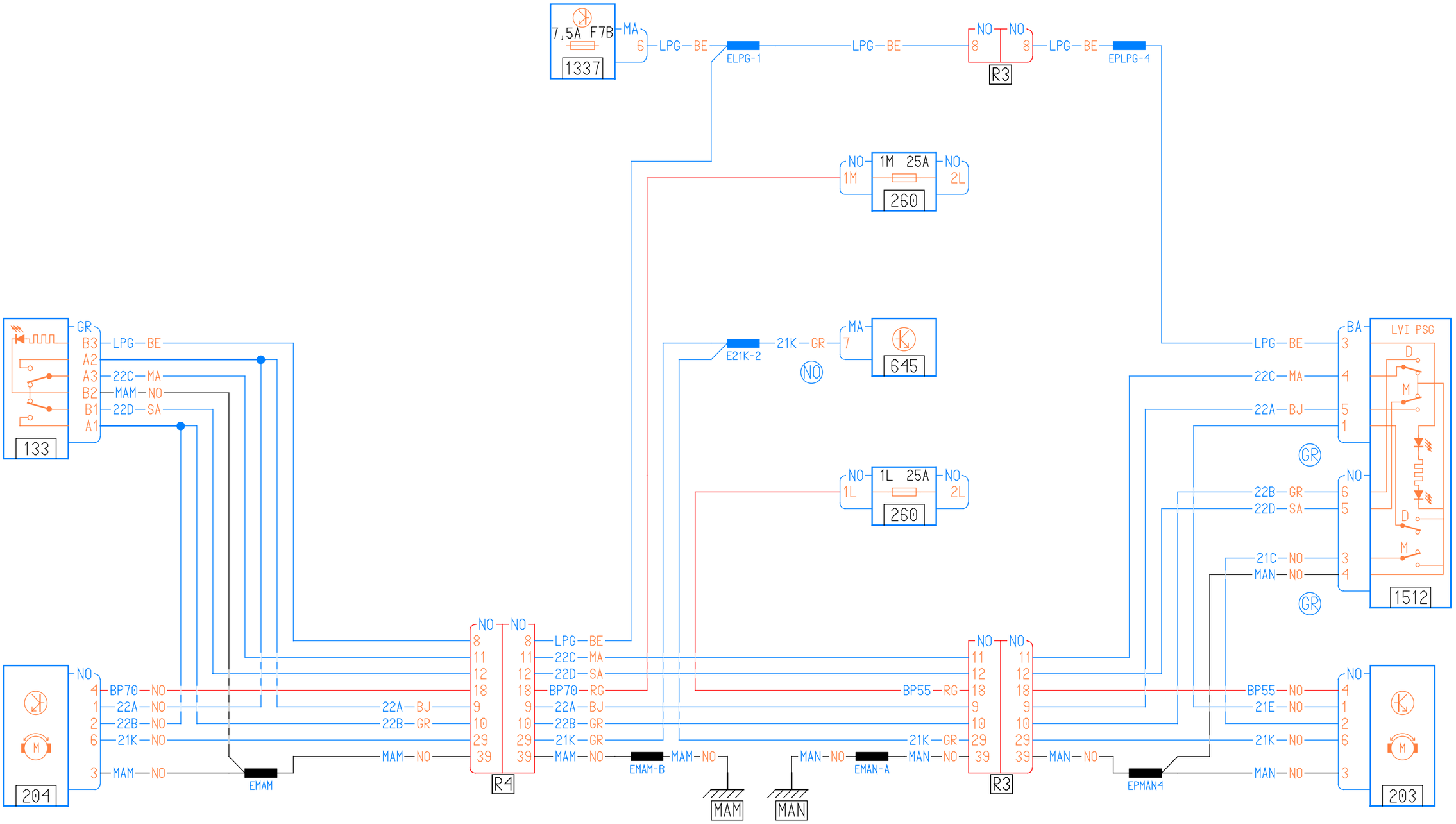
7,5A F7B
1337
MA
6
LPG—BE
ELPG-1
LPG—BE
NO
8
NO
8
R3
LPG—BE
EPLPG-4
NO
1M
1M 25A
260
NO
2L
133
GR
B3
A2
A3
B2
B1
A1
LPG—BE
22C—MA
MAM—NO
22D—SA
E21K-2
21K—GR
MA
7
645
NO
1L
1L 25A
260
NO
2L
LPG—BE
22C—MA
22A—BJ
BA
3
4
5
1
LVI PSG
D
M
GR
22B—GR
22D—SA
NO
6
5
21C—NO
MAN—NO
3
4
1512
204
NO
4
1
2
6
3
BP70—NO
22A—NO
22B—NO
21K—NO
MAM—NO
EMAM
R4
NO
8
11
12
18
9
10
29
39
22A—BJ
22B—GR
MAM—NO
LPG—BE
22C—MA
22D—SA
BP70—RG
22A—BJ
22B—GR
21K—GR
MAM—NO
EMAM-B
MAM—NO
MAM
MAN—NO
EMAN-A
MAN—NO
MAN
BP55—RG
21K—GR
R3
NO
11
12
18
9
10
29
39
MAN—NO
EPMAN4
BP55—NO
21E—NO
21K—NO
MAN—NO
203