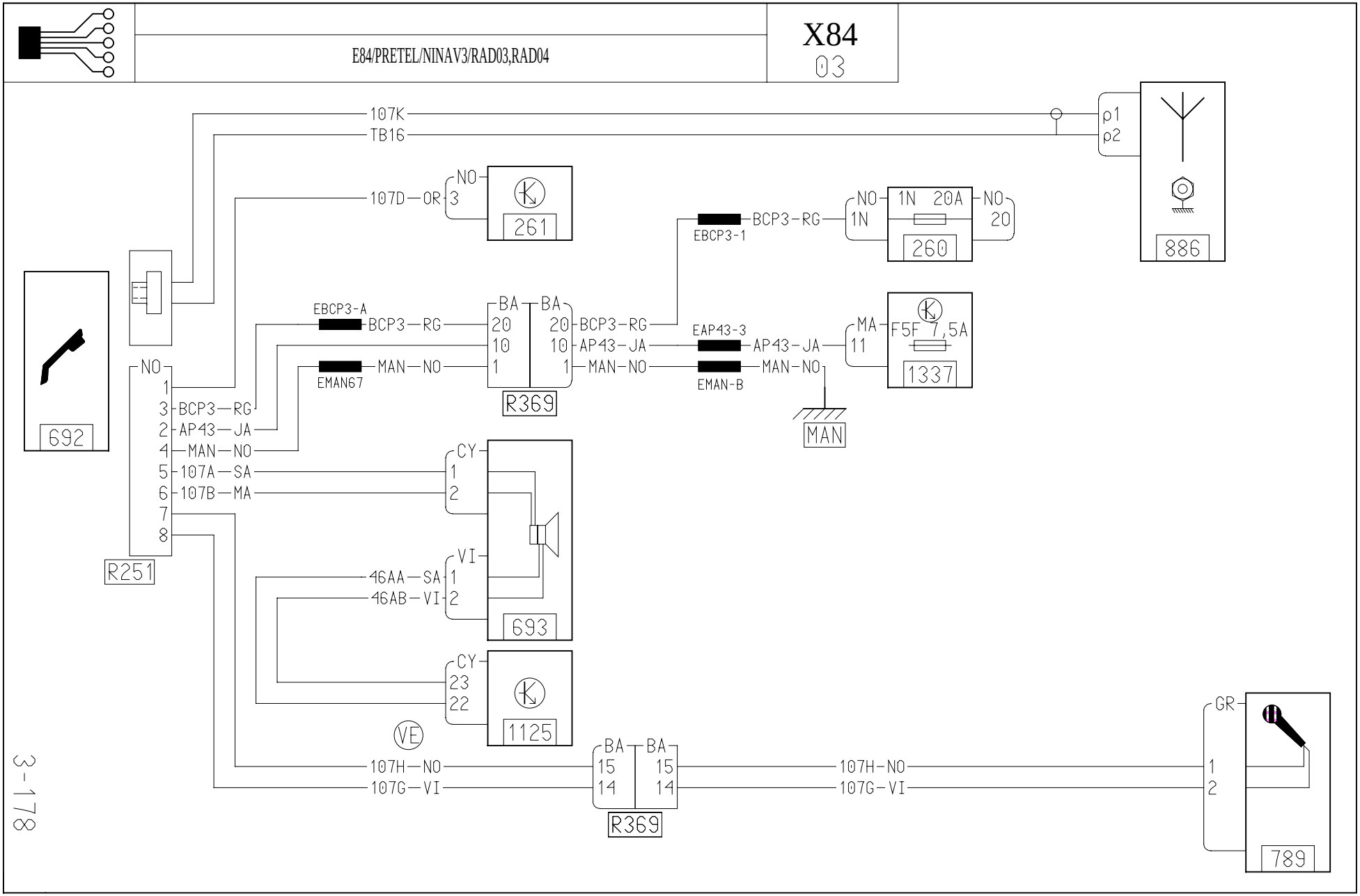
E84/PRETEL/NINAV3/RAD03,RAD04
X84
03
107K
TB16
p1
p2
886
107D—OR
NO
3
261
EBCP3-1
BCP3-RG
NO
1N
1N 20A
NO
20
260
692
EBCP3-A
BCP3—RG
BA
20
10
1
BA
20
10
1
BCP3-RG
AP43-JA
MAN-NO
EAP43-3
AP43-JA
MAN-NO
EMAN67
EMAN-B
MA
11
F5F 7,5A
1337
R369
MAN
NO
1
3 BCP3—RG
2 AP43—JA
4 MAN—NO
5 107A—SA
6 107B—MA
7
8
R251
CY
1
2
VI
46AA—SA
46AB—VI
1
2
693
CY
23
22
1125
VE
107H—NO
107G—VI
BA
15
14
BA
15
14
R369
107H-NO
107G-VI
GR
1
2
789