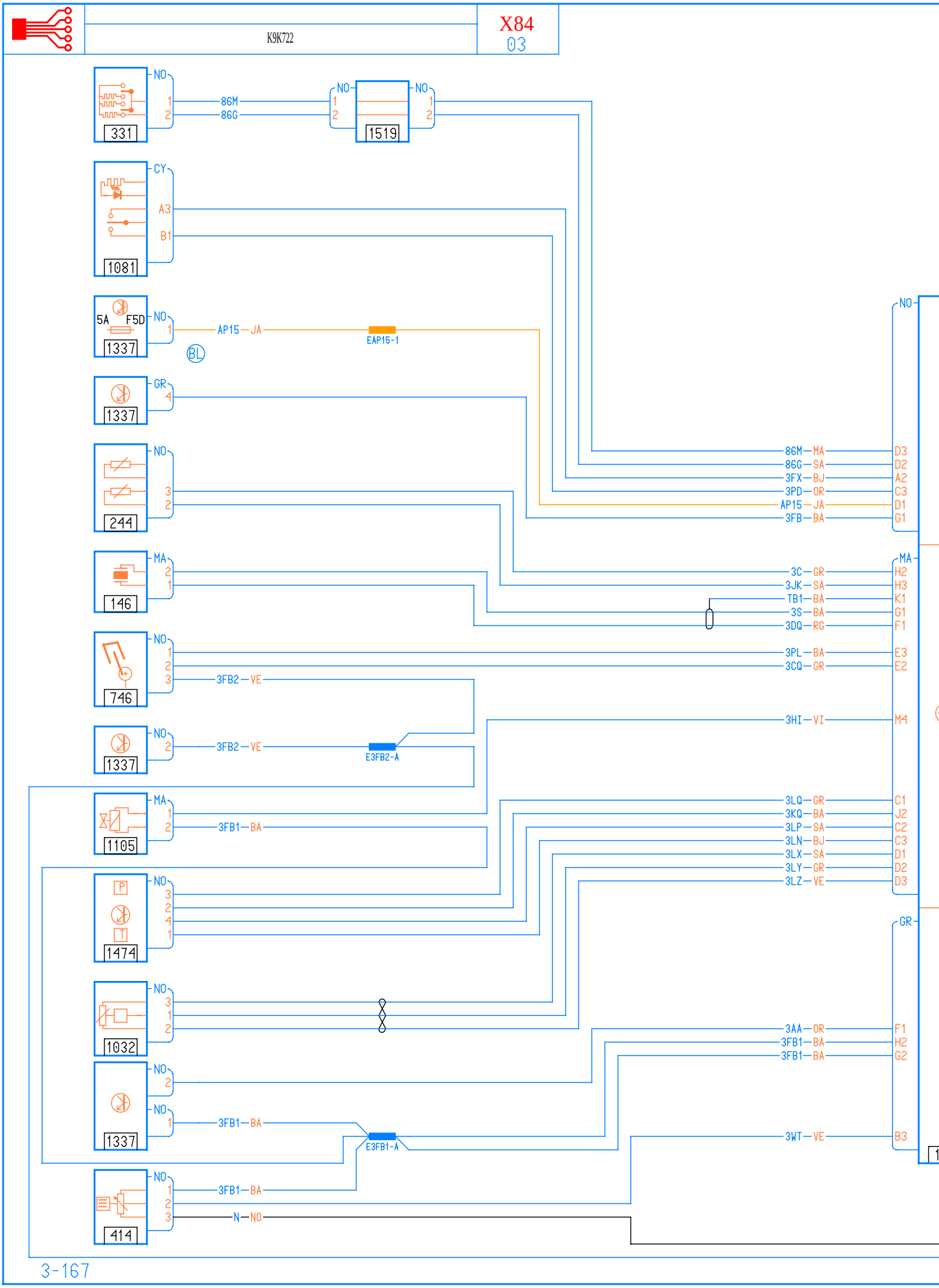
K9K722
X84
03
331
NO
1
2
86M
86G
1519
NO
1
2
NO
1
2
1081
CY
A3
B1
5A
F5D
1337
NO
1
AP15—JA
EAP15-1
BL
1337
GR
4
244
NO
3
2
146
MA
2
1
746
NO
1
2
3
3FB2—VE
1337
NO
2
3FB2—VE
E3FB2-A
1105
MA
1
2
3FB1—BA
1474
NO
3
2
4
1
1032
NO
3
1
2
1337
NO
2
NO
1
3FB1—BA
E3FB1-A
414
NO
1
2
3
3FB1—BA
N—NO
NO
86M—MA
86G—SA
3FX—BJ
3PD—OR
AP15—JA
3FB—BA
D3
D2
A2
C3
D1
G1
MA
3C—GR
3JK—SA
TB1—BA
3S—BA
3DQ—RG
H2
H3
K1
G1
F1
3PL—BA
3CQ—GR
E3
E2
3HI—VI
M4
3LQ—GR
3KQ—BA
3LP—SA
3LN—BJ
3LX—SA
3LY—GR
3LZ—VE
C1
J2
C2
C3
D1
D2
D3
GR
3AA—OR
3FB1—BA
3FB1—BA
F1
H2
G2
3WT—VE
B3

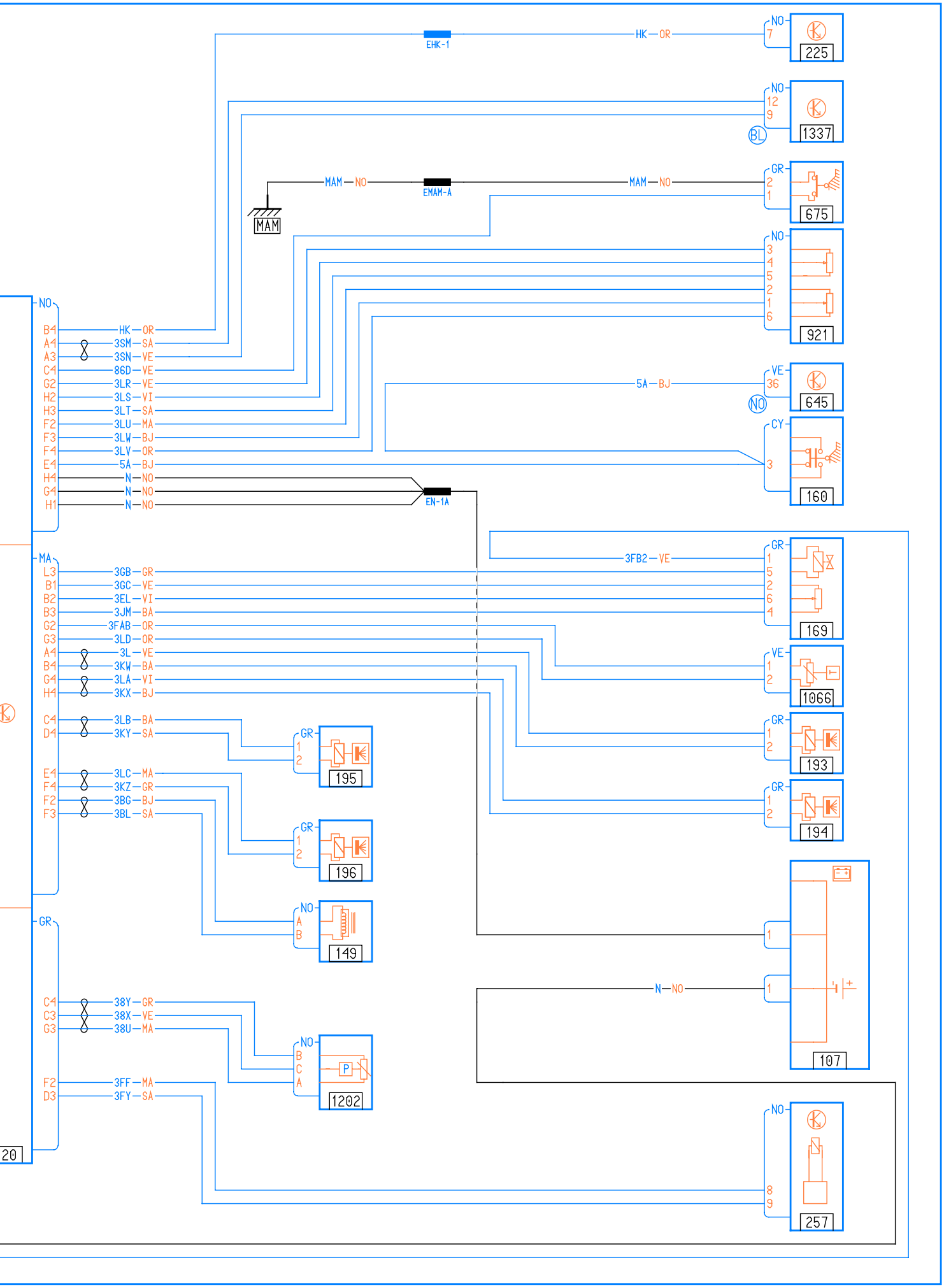
EHK-1
HK—OR
NO
7
225
NO
12
9
BL
1337
MAM—NO
EMAM-A
MAM—NO
GR
2
1
675
MAM
NO
3
4
5
2
1
6
921
NO
B4 HK—OR
A4 3SM—SA
A3 3SN—VE
C4 86D—VE
G2 3LR—VE
H2 3LS—VI
H3 3LT—SA
F2 3LU—MA
F3 3LW—BJ
F4 3LV—OR
E4 5A—BJ
H4 N—NO
G4 N—NO
H1 N—NO
5A—BJ
VE
36
NO
645
CY
3
160
EN-1A
MA
L3 3GB—GR
B1 3GC—VE
B2 3EL—VI
B3 3JM—BA
G2 3FAB—OR
G3 3LD—OR
A4 3L—VE
B4 3KW—BA
G4 3LA—VI
H4 3KX—BJ
3FB2—VE
GR
1
5
2
6
4
169
VE
1
2
1066
C4 3LB—BA
D4 3KY—SA
GR
1
2
195
GR
1
2
193
E4 3LC—MA
F4 3KZ—GR
F2 3BG—BJ
F3 3BL—SA
GR
1
2
196
GR
1
2
194
NO
A
B
149
GR
1
1
N—NO
107
C4 38Y—GR
C3 38X—VE
G3 38U—MA
NO
B
C
A
P
1202
F2 3FF—MA
D3 3FY—SA
NO
8
9
257
20