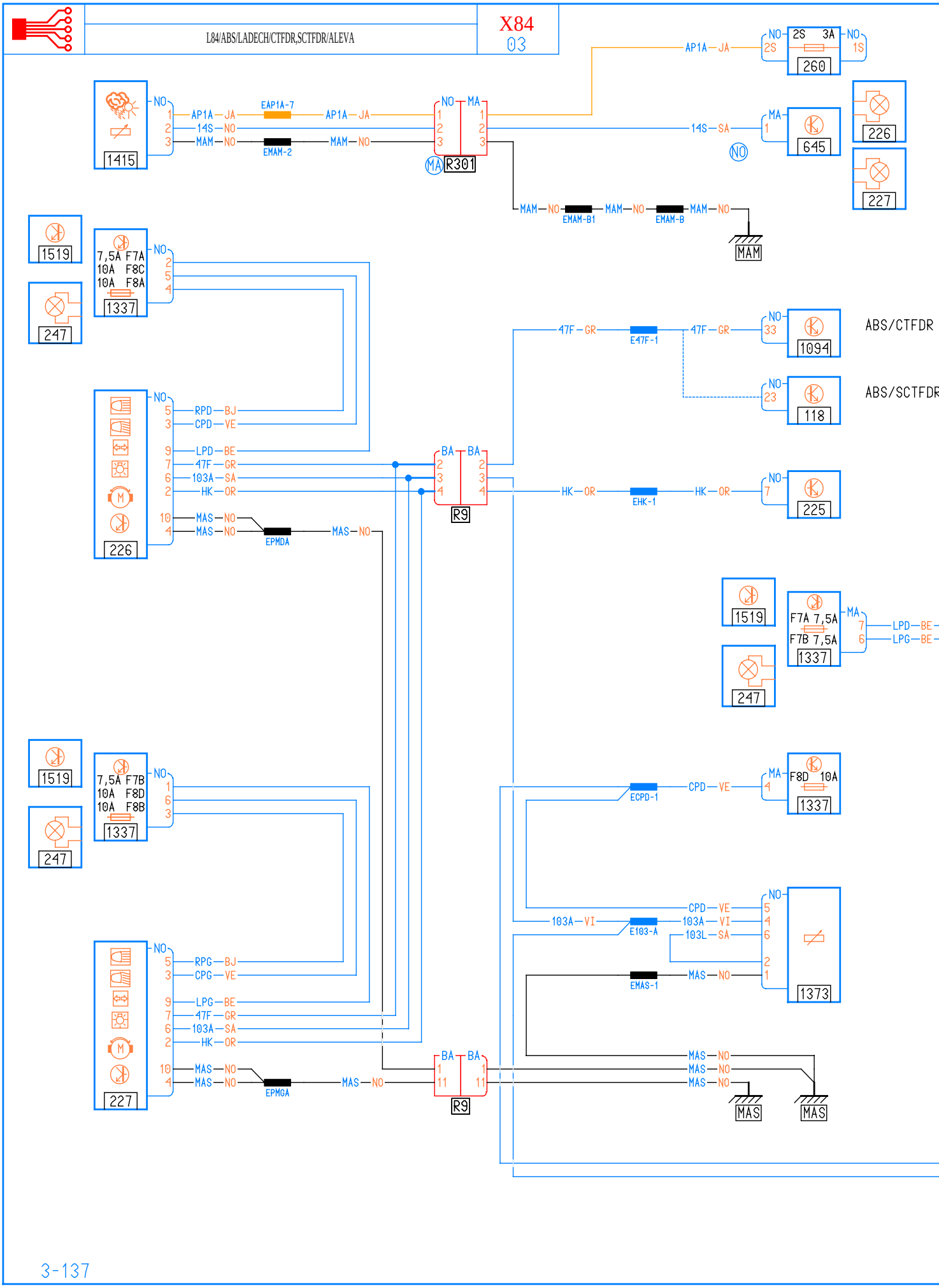
L84/ABS/LADECH/CTFDR,SCTFDR/ALEVA
X84
03
1415
AP1A—JA
EAP1A-7
14S—NO
MAM—NO
EMAM-2
R301
260
2S 3A
1S
645
226
227
14S—SA
EMAM-B1
EMAM-B
MAM
1519
247
7,5A F7A
10A F8C
10A F8A
1337
47F—GR
E47F-1
1094
ABS/CTFDR
118
ABS/SCTFDR
RPD—BJ
CPD—VE
LPD—BE
103A—SA
HK—OR
MAS—NO
EPMDA
R9
HK-1
225
F7A 7,5A
F7B 7,5A
LPD—BE
LPG—BE
7,5A F7B
10A F8D
10A F8B
ECPD-1
F8D 10A
RPG—BJ
CPG—VE
LPG—BE
EPMGA
103A—VI
E103-A
103L—SA
EMAS-1
1373
MAS

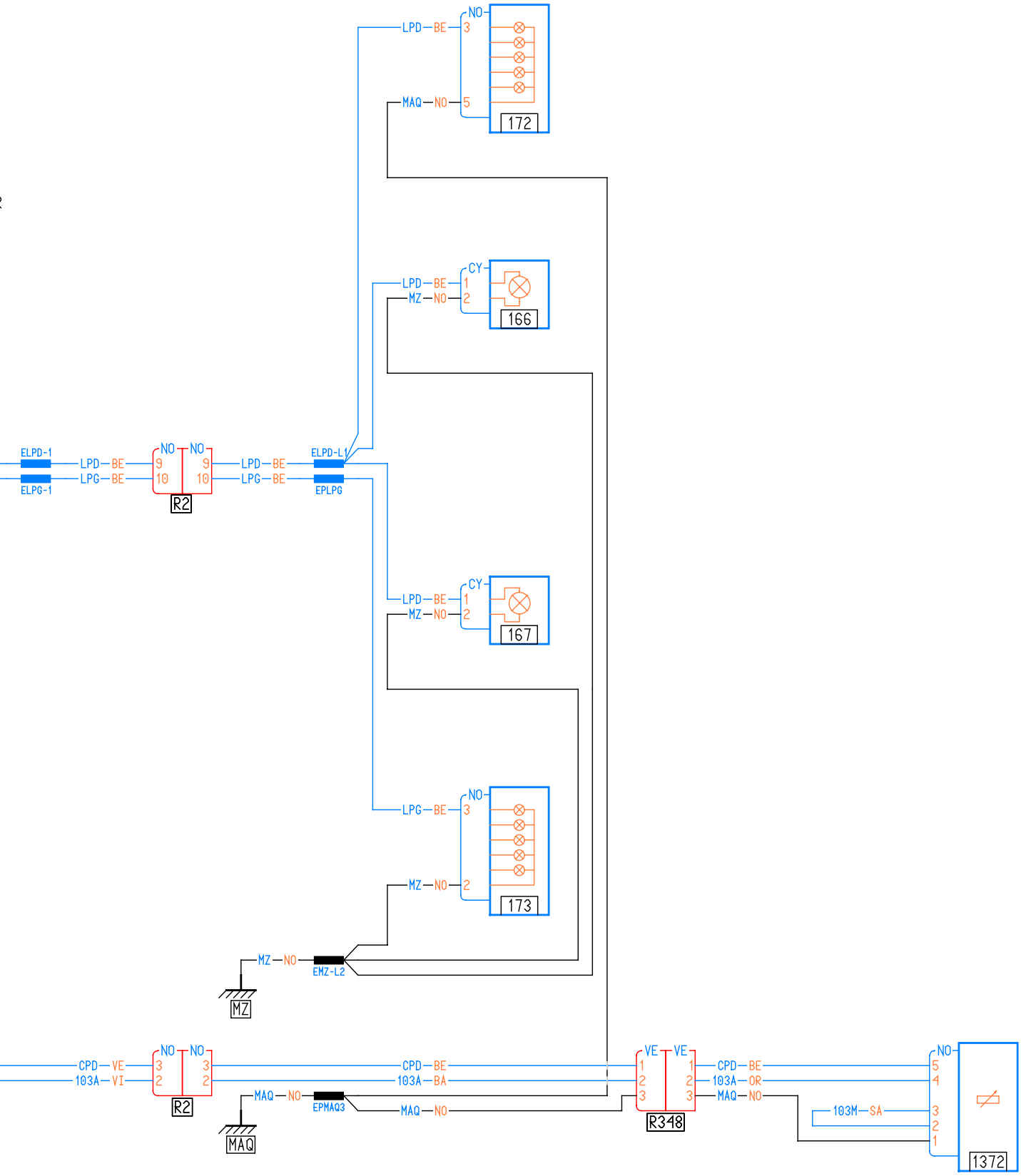
LPD—BE
NO
3
MAQ—NO
5
172
LPD—BE
CY
1
MZ—NO
2
166
ELPD-1
LPD—BE
LPG—BE
ELPG-1
NO
9
10
R2
ELPD-L1
EPLPG
LPD—BE
MZ—NO
167
LPG—BE
173
MZ—NO
EMZ-L2
MZ
CPD—VE
103A—VI
CPD—BE
103A—BA
MAQ—NO
EPMAQ3
MAQ
VE
R348
CPD—BE
103A—OR
103M—SA
1372