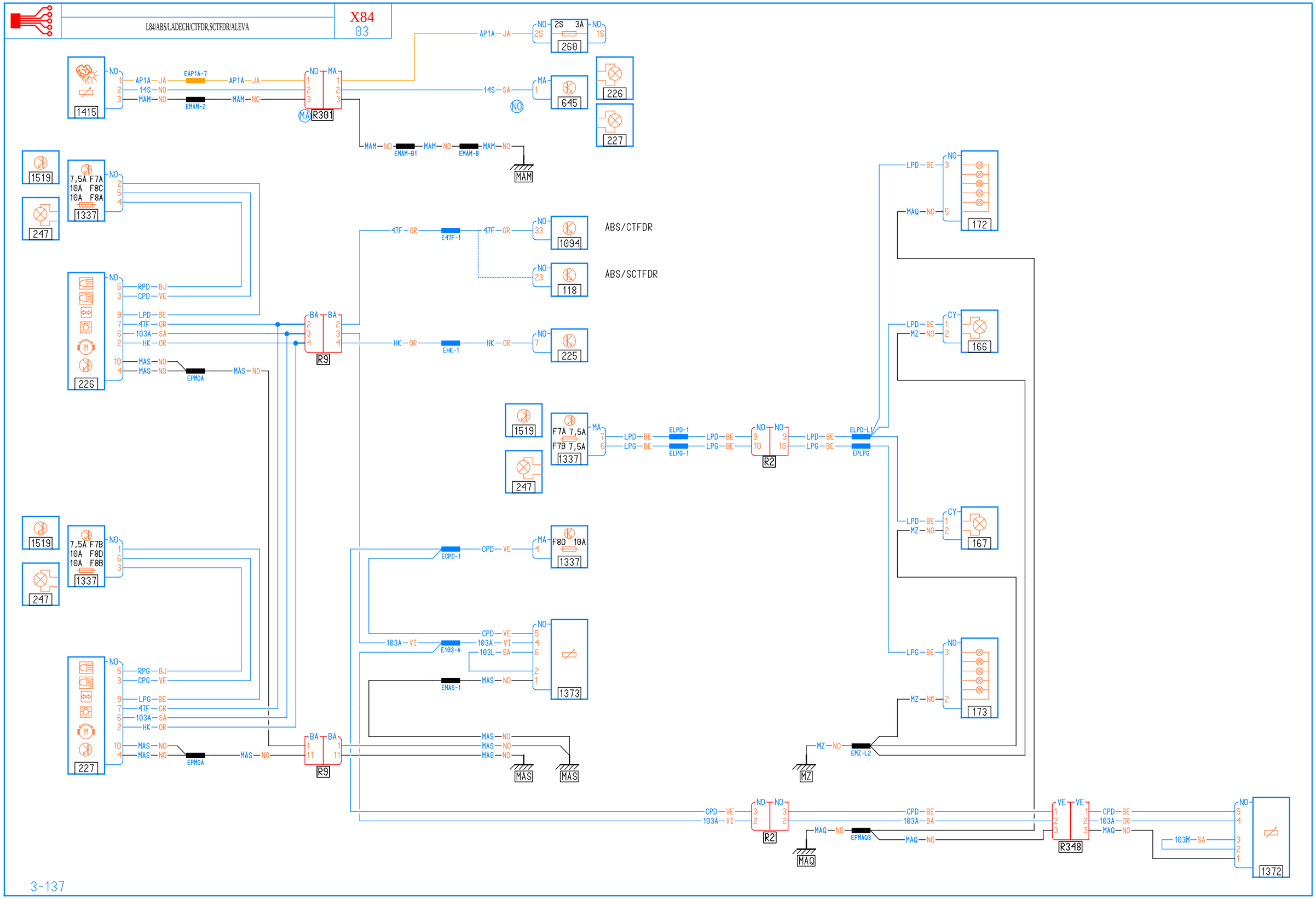
L84/ABS/LADECH/CTFDR,SCTFDR/ALEVA
X84
03
1415
EAP1A-7
EMAM-2
R301
260
2S 3A
645
226
227
EMAM-B1
EMAM-B
MAM
1519
247
7,5A F7A
10A F8C
10A F8A
1337
E47F-1
1094
ABS/CTFDR
118
ABS/SCTFDR
EPMDA
R9
EHK-1
225
172
166
167
173
F7A 7,5A
F7B 7,5A
ELPD-1
ELPG-1
R2
ELPD-L1
EPLPG
7,5A F7B
10A F8D
10A F8B
ECPD-1
F8D 10A
E103-A
EMAS-1
1373
EPMGA
MAS
EMZ-L2
MZ
EPMAQ3
MAQ
R348
1372