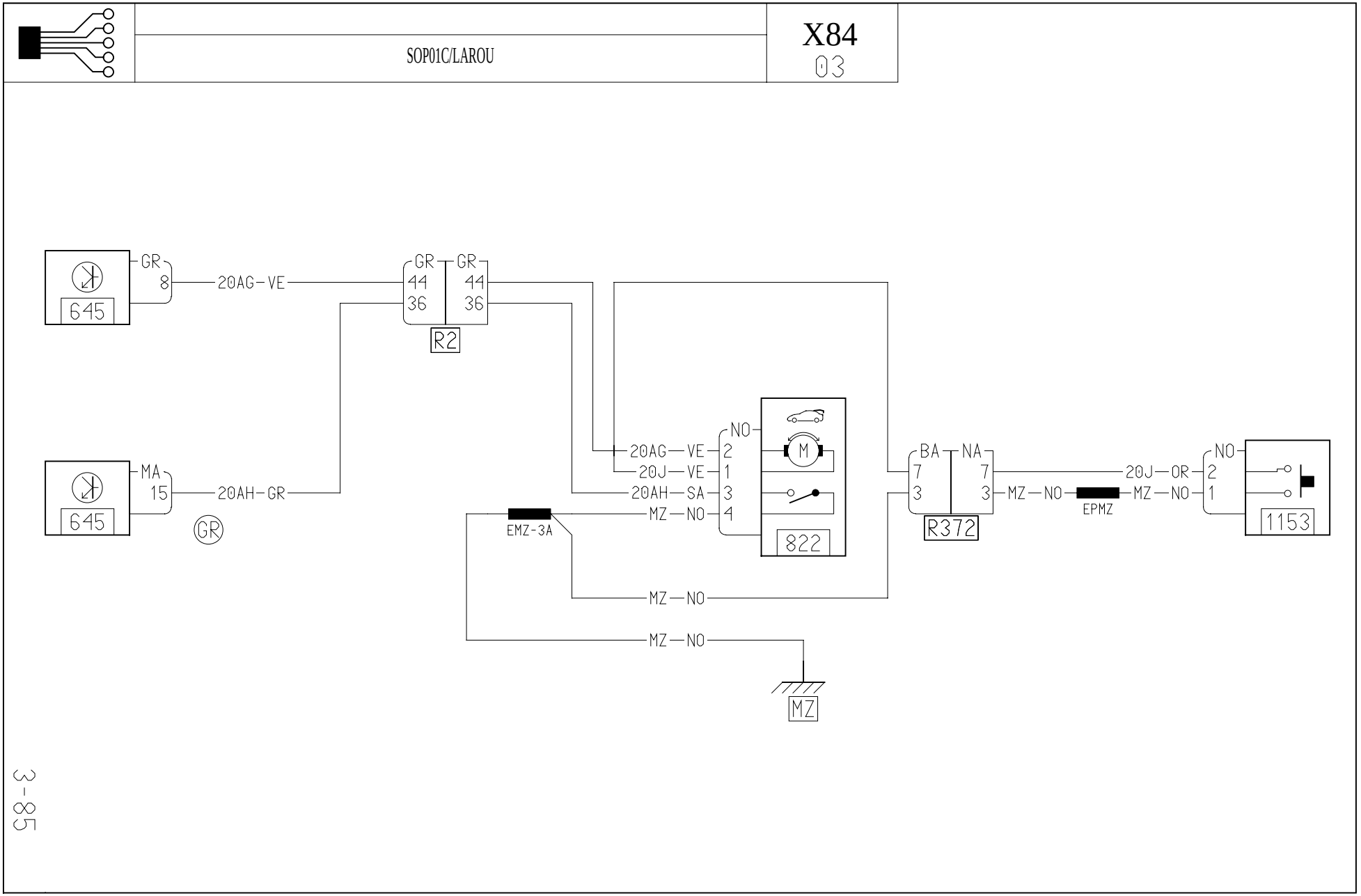
SOP01C/LAROU
X84
03
645
GR
8
20AG-VE
645
MA
15
20AH-GR
GR
GR
44
36
GR
44
36
R2
20AG—VE
20J—VE
20AH—SA
MZ—NO
NO
2
1
3
4
M
822
EMZ-3A
MZ—NO
MZ—NO
MZ
BA
7
3
NA
7
3
R372
MZ—NO
EPMZ
20J—OR
MZ—NO
NO
2
1
1153