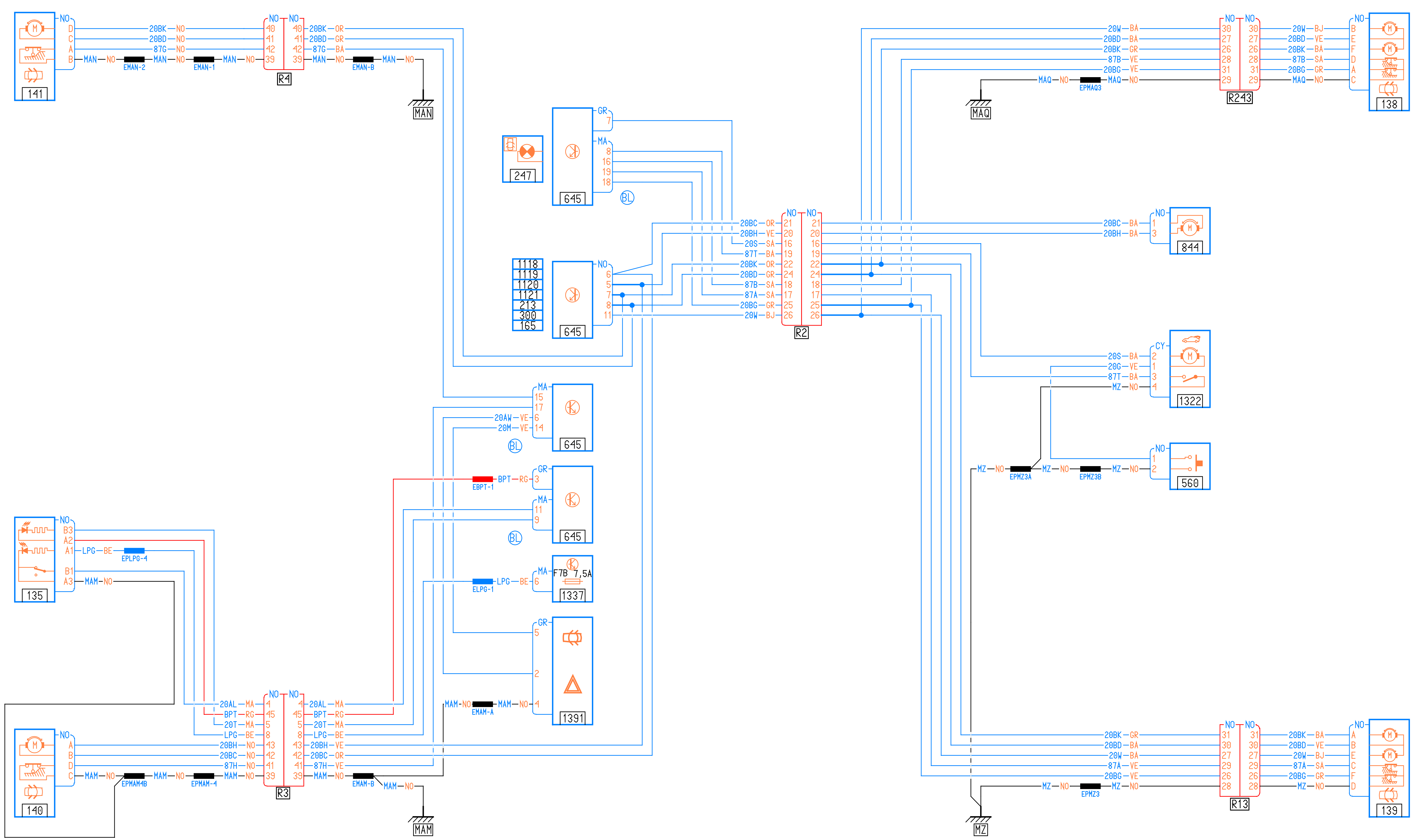

141
R4
EMAN-2
EMAN-1
EMAN-B
MAN
20BK—NO
20BD—NO
87G—NO
MAN—NO
20BK—OR
20BD—GR
87G—BA
247
645
BL
1118
1119
1120
1121
213
300
165
R2
20BC—OR
20BH—VE
20S—SA
87T—BA
20BK—OR
20BD—GR
87B—SA
87A—SA
20BG—GR
20W—BJ
MAQ
EPMAQ3
MAQ—NO
R243
20W—BA
20BD—BA
20BK—GR
87B—VE
20BG—VE
20W—BJ
20BD—VE
20BK—BA
87B—SA
20BG—GR
138
844
20BC—BA
20BH—BA
1322
20S—BA
20G—VE
87T—BA
MZ—NO
560
EPMZ3A
EPMZ3B
20AW—VE
20M—VE
EBPT-1
BPT—RG
135
EPLPG-4
LPG—BE
MAM—NO
ELPG-1
1337
F7B 7,5A
1391
EMAM-A
R3
20AL—MA
BPT—RG
20T—MA
LPG—BE
20BH—NO
20BC—NO
87H—NO
20BH—VE
20BC—OR
87H—VE
140
EPMAM4B
EPMAM-4
EMAM-B
MAM
R13
20BK—GR
20BD—BA
20W—BA
87A—VE
20BG—VE
20BK—BA
20BD—VE
20W—BJ
87A—SA
20BG—GR
EPMZ3
MZ
139