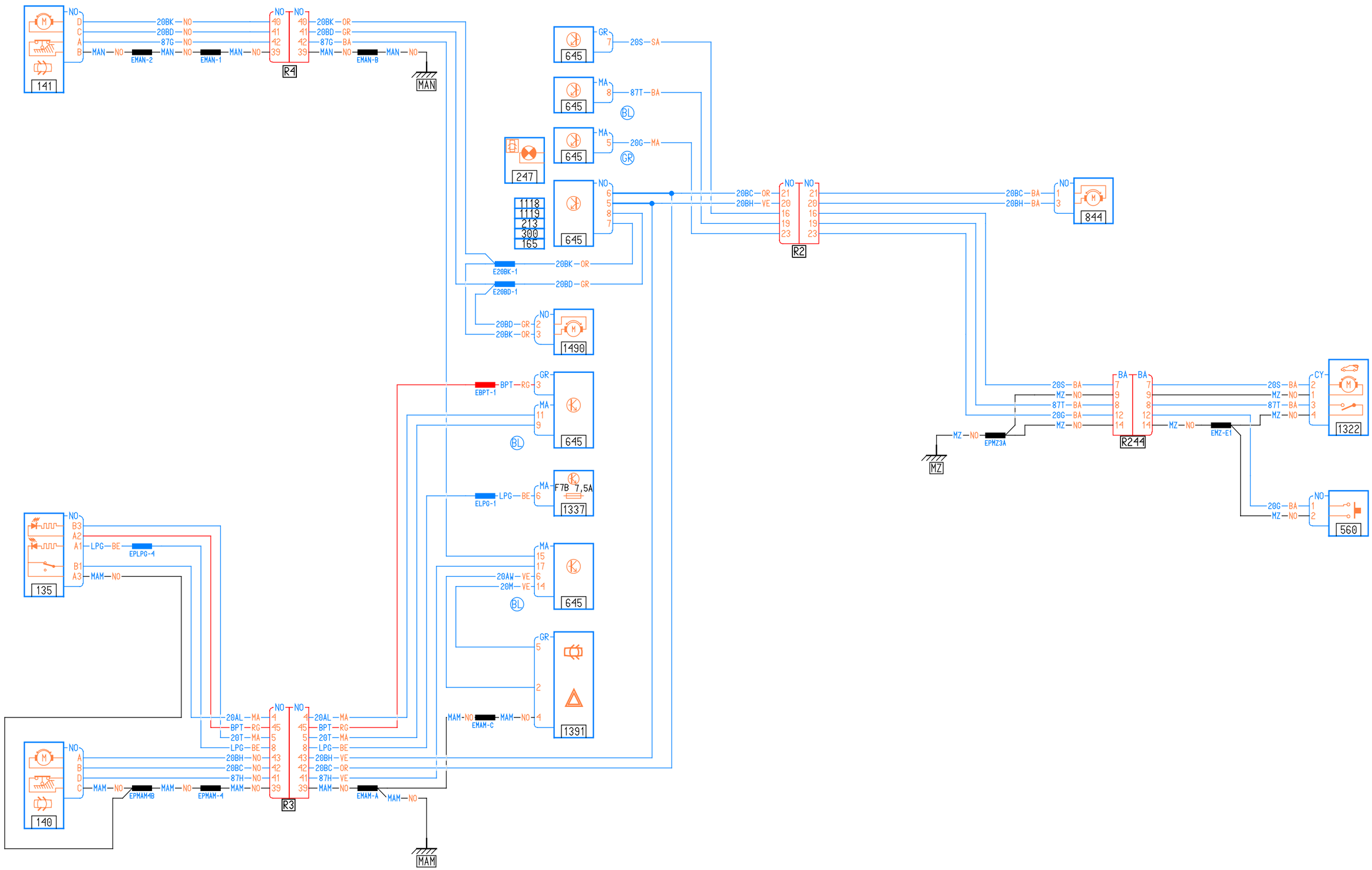
141
R4
MAN
EMAN-2
EMAN-1
EMAN-B
645
247
1118
1119
213
300
165
E20BK-1
E20BD-1
1490
EBPT-1
ELPG-1
F7B 7,5A
1337
135
EPLPG-4
1391
EMAM-C
140
EPMAM4B
EPMAM-4
EMAM-A
R3
MAM
R2
844
R244
EPMZ3A
EMZ-E1
MZ
1322
560