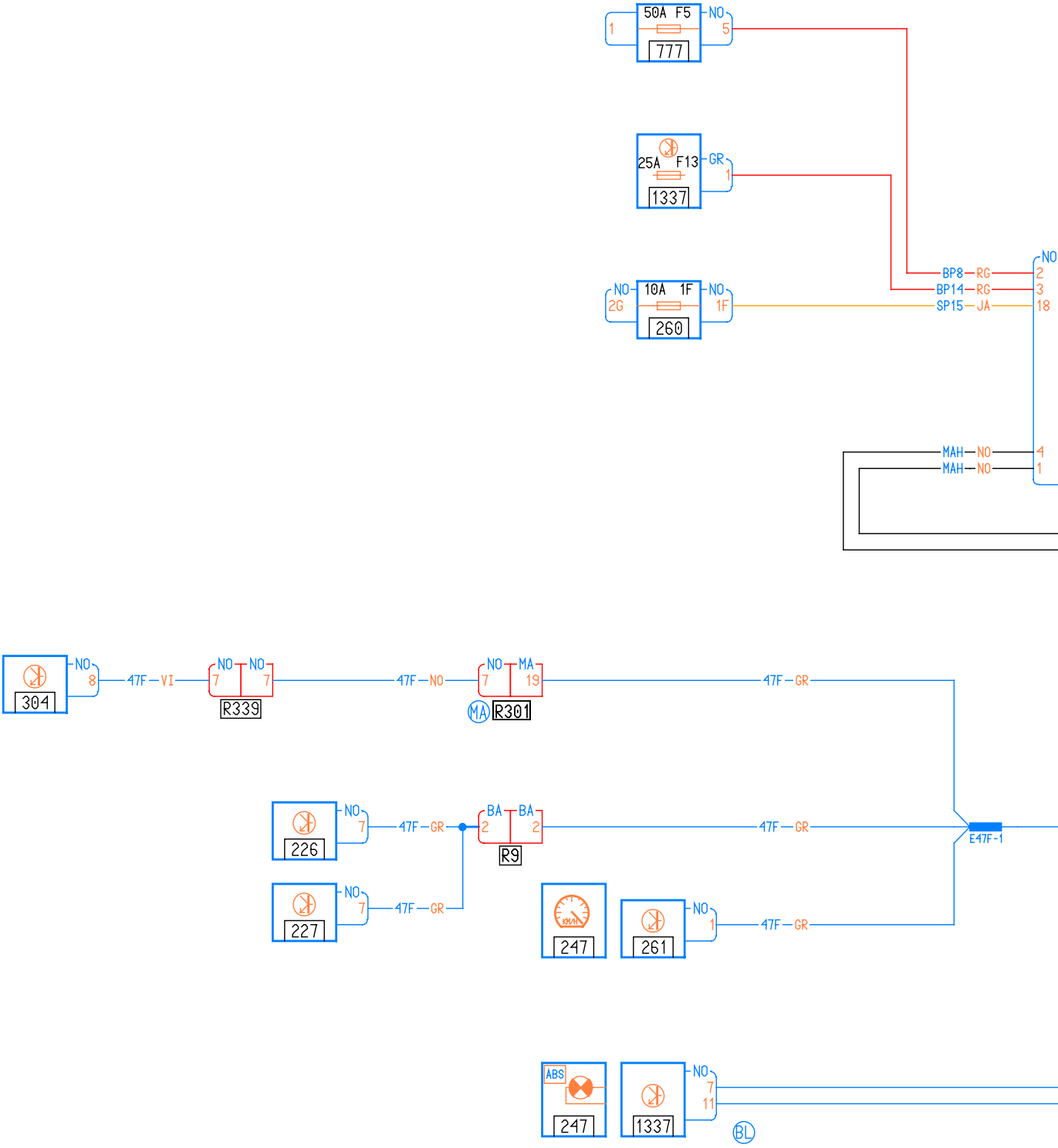
50A F5
777
1
NO
5
25A F13
1337
GR
1
NO
2G
10A 1F
260
NO
1F
BP8 RG
BP14 RG
SP15 JA
NO
2
3
18
MAH NO
MAH NO
4
1
304
NO
8
47F VI
NO
7
NO
7
R339
47F NO
NO
7
MA
19
MA
R301
47F GR
226
NO
7
47F GR
BA
2
BA
2
R9
47F GR
E47F-1
227
NO
7
47F GR
247
261
NO
1
47F GR
ABS
247
1337
NO
7
11
BL

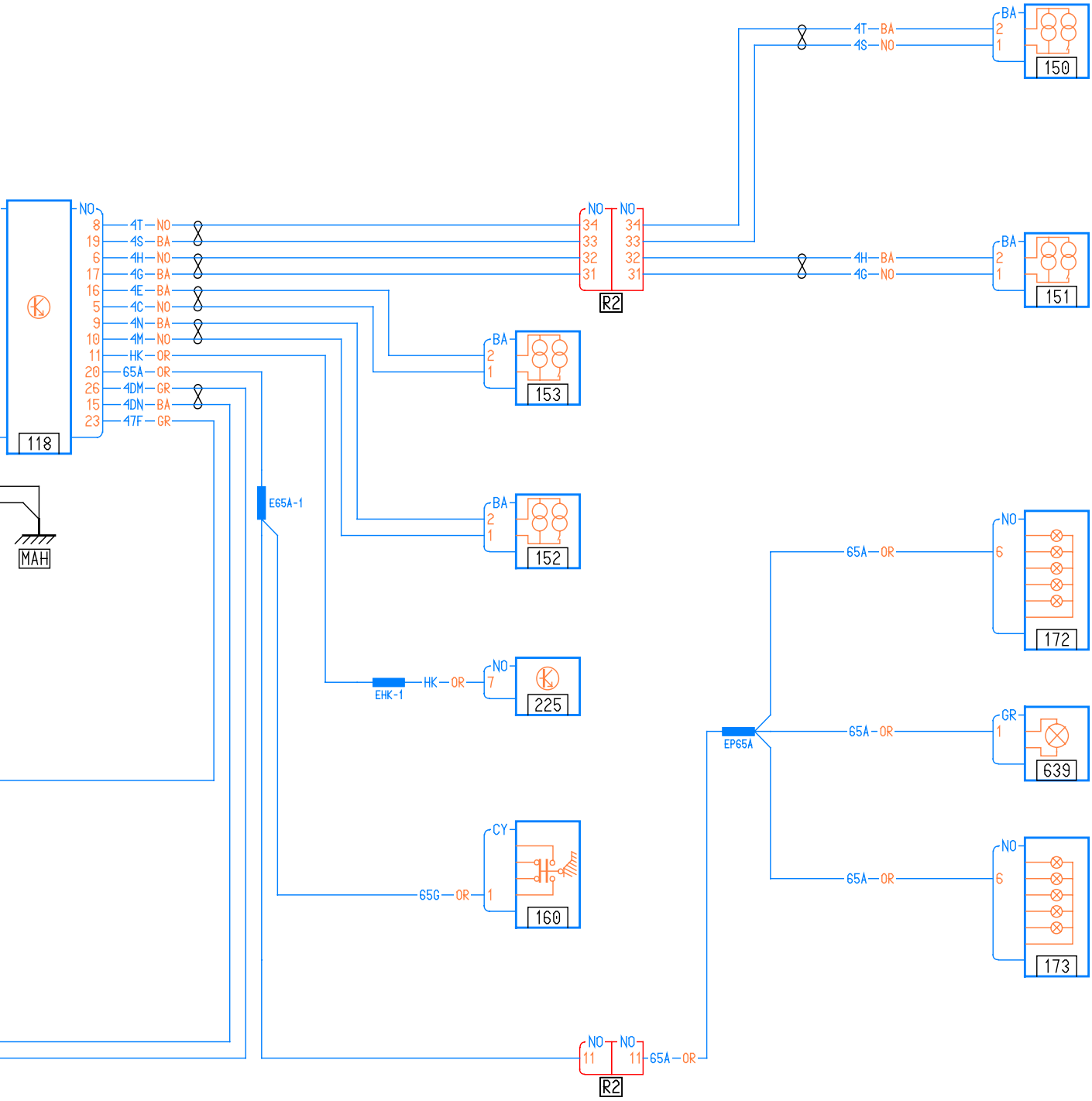
118
NO
8 4T—NO
19 4S—BA
6 4H—NO
17 4G—BA
16 4E—BA
5 4C—NO
9 4N—BA
10 4M—NO
11 HK—OR
20 65A—OR
26 4DM—GR
15 4DN—BA
23 47F—GR
MAH
E65A-1
EHK-1
HK—OR
NO
7
225
CY
1
65G—OR
160
NO
34
33
32
31
R2
4T—BA
4S—NO
BA
2
1
150
4H—BA
4G—NO
151
153
152
NO
11
65A—OR
EP65A
NO
6
172
GR
1
639
173