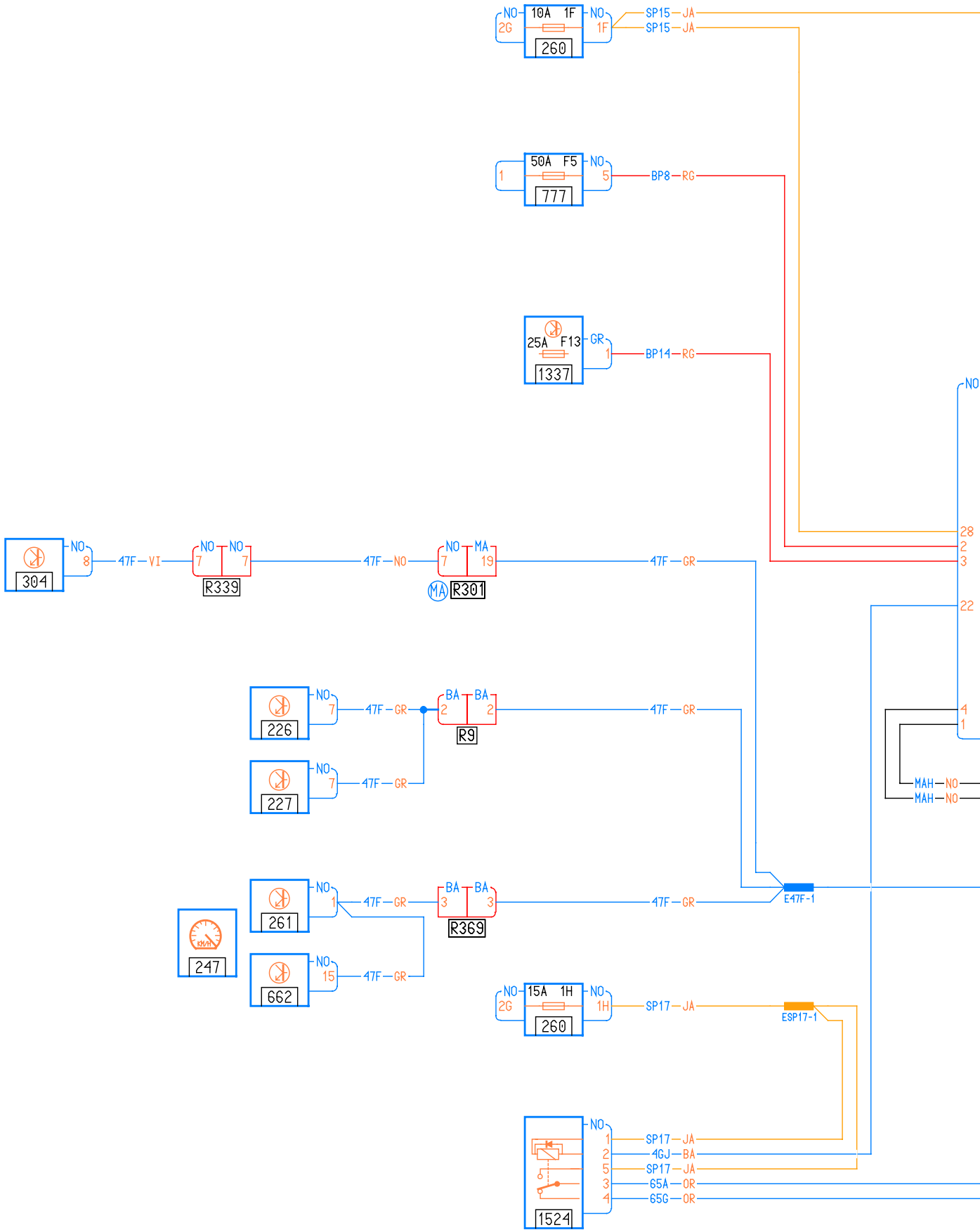
10A 1F
260
NO
2G
1F
SP15 — JA
SP15 — JA
50A F5
777
1
5
BP8 — RG
25A F13
1337
GR
1
BP14 — RG
304
8
47F — VI
R339
7
47F — NO
R301
MA
19
47F — GR
226
227
47F — GR
R9
BA
2
261
662
15
R369
3
247
KWH
E47F-1
15A 1H
1H
SP17 — JA
ESP17-1
1524
4GJ — BA
65A — OR
65G — OR
28
22
4
MAH — NO

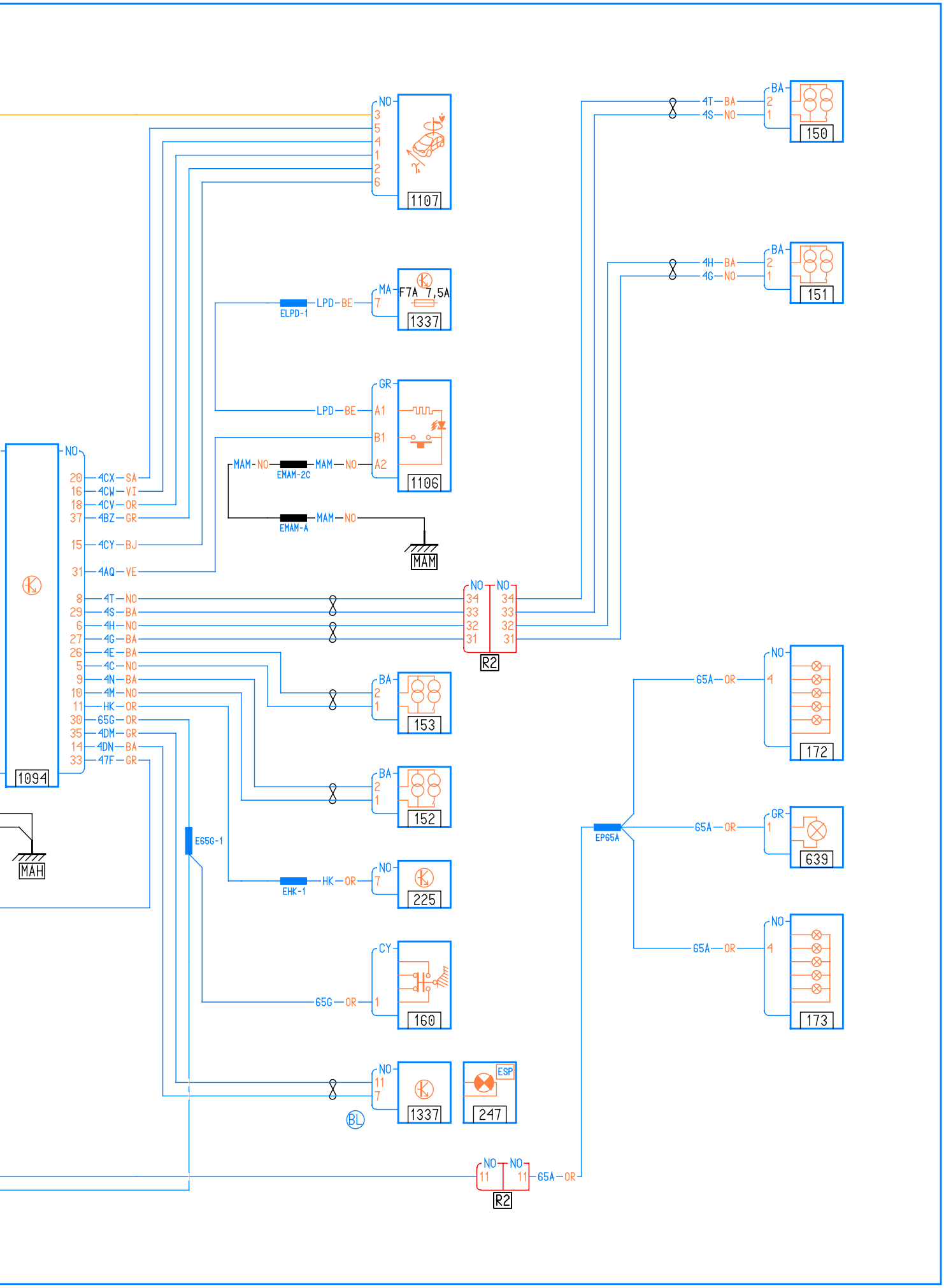
1094
NO
20 4CX—SA
16 4CW—VI
18 4CV—OR
37 4BZ—GR
15 4CY—BJ
31 4AQ—VE
8 4T—NO
29 4S—BA
6 4H—NO
27 4G—BA
26 4E—BA
5 4C—NO
9 4N—BA
10 4M—NO
11 HK—OR
30 65G—OR
35 4DM—GR
14 4DN—BA
33 47F—GR
MAH
E65G-1
NO
3
5
4
1
2
6
1107
MA
7
F7A 7,5A
1337
ELPD-1
LPD—BE
GR
A1
B1
A2
1106
LPD—BE
MAM-NO
EMAM-2C
MAM—NO
EMAM-A
MAM—NO
MAM
NO
34
33
32
31
R2
BA
2
1
153
BA
2
1
152
EHK-1
HK—OR
NO
7
225
CY
1
160
65G—OR
NO
11
7
1337
BL
ESP
247
NO
11
R2
65A—OR
4T—BA
4S—NO
BA
2
1
150
4H—BA
4G—NO
BA
2
1
151
EP65A
65A—OR
NO
4
172
65A—OR
GR
1
639
65A—OR
NO
4
173