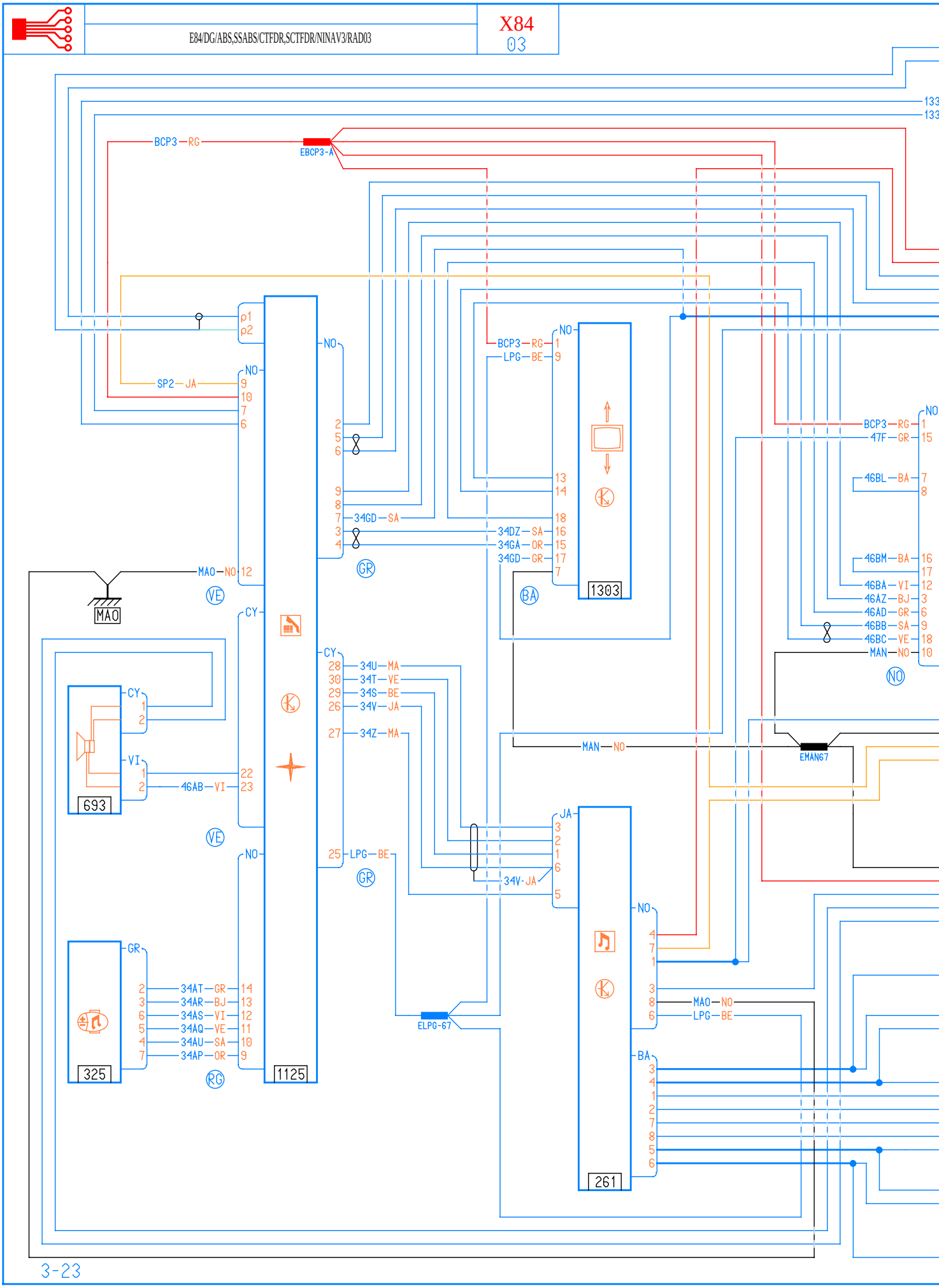
BCP3—RG
EBCP3-A
SP2—JA
MAO—NO
MAO
693
325
1125
1303
261
34GD—SA
34DZ—SA
34GA—OR
34GD—GR
34U—MA
34T—VE
34S—BE
34V—JA
34Z—MA
LPG—BE
34V-JA
ELPG-67
MAN—NO
EMAN67
47F—GR
46BL—BA
46BM—BA
46BA—VI
46AZ—BJ
46AD—GR
46BB—SA
46BC—VE
46AB—VI
34AT—GR
34AR—BJ
34AS—VI
34AQ—VE
34AU—SA
34AP—OR
MAO—NO
LPG—BE

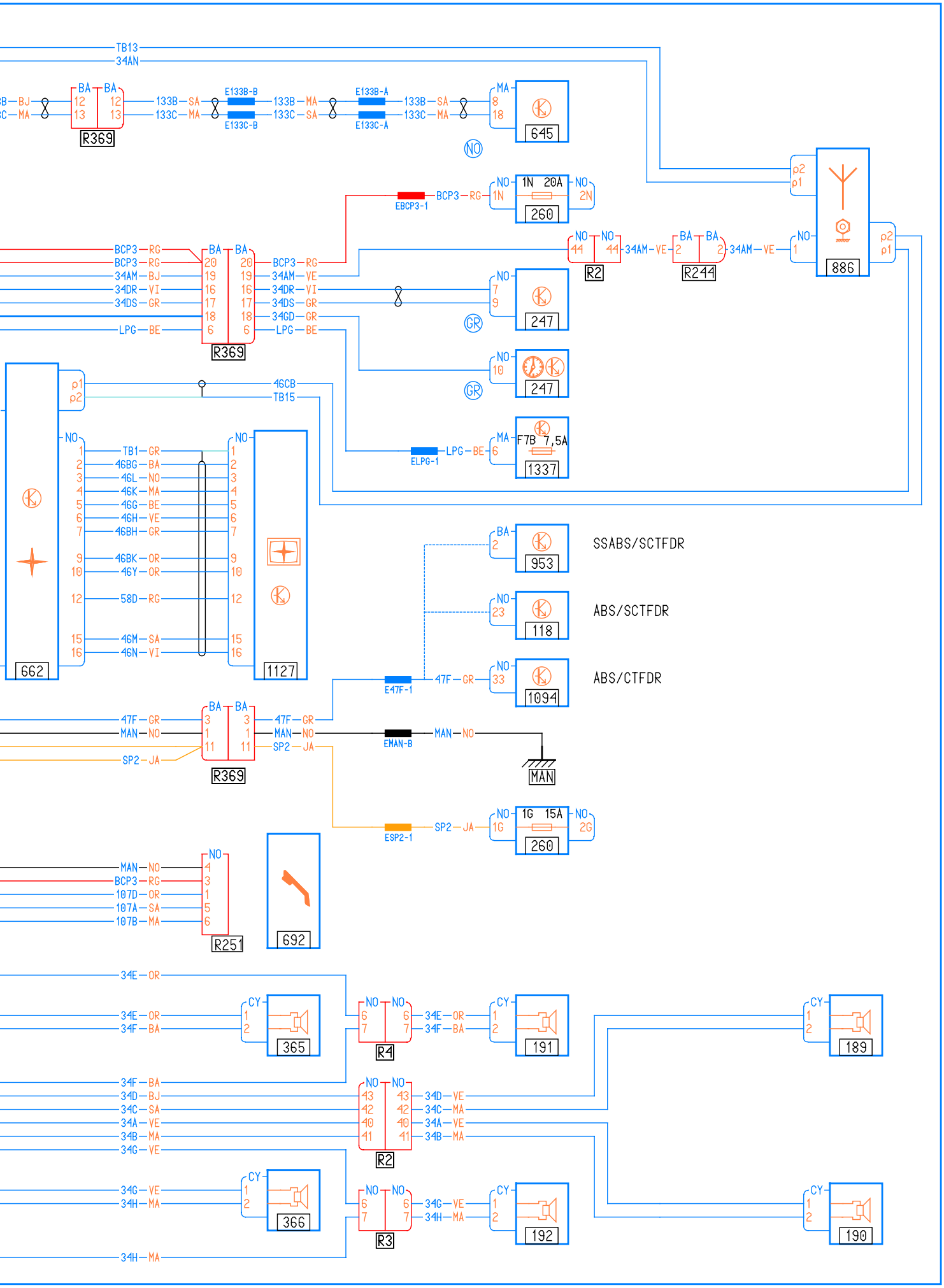
TB13
34AN
R369
133B—SA
133C—MA
E133B-B
E133C-B
133B—MA
133C—SA
E133B-A
E133C-A
645
NO
EBCP3-1
BCP3—RG
1N 20A
260
886
R2
34AM—VE
R244
247
GR
1337
F7B 7,5A
ELPG-1
LPG—BE
46CB
TB15
662
1127
TB1—GR
46BG—BA
46L—NO
46K—MA
46G—BE
46H—VE
46BH—GR
46BK—OR
46Y—OR
58D—RG
46M—SA
46N—VI
953
SSABS/SCTFDR
118
ABS/SCTFDR
1094
ABS/CTFDR
E47F-1
47F—GR
MAN—NO
SP2—JA
EMAN-B
MAN
ESP2-1
1G 15A
R251
692
107D—OR
107A—SA
107B—MA
34E—OR
34F—BA
365
R4
191
189
34D—BJ
34C—SA
34A—VE
34B—MA
34G—VE
34H—MA
366
R3
192
190