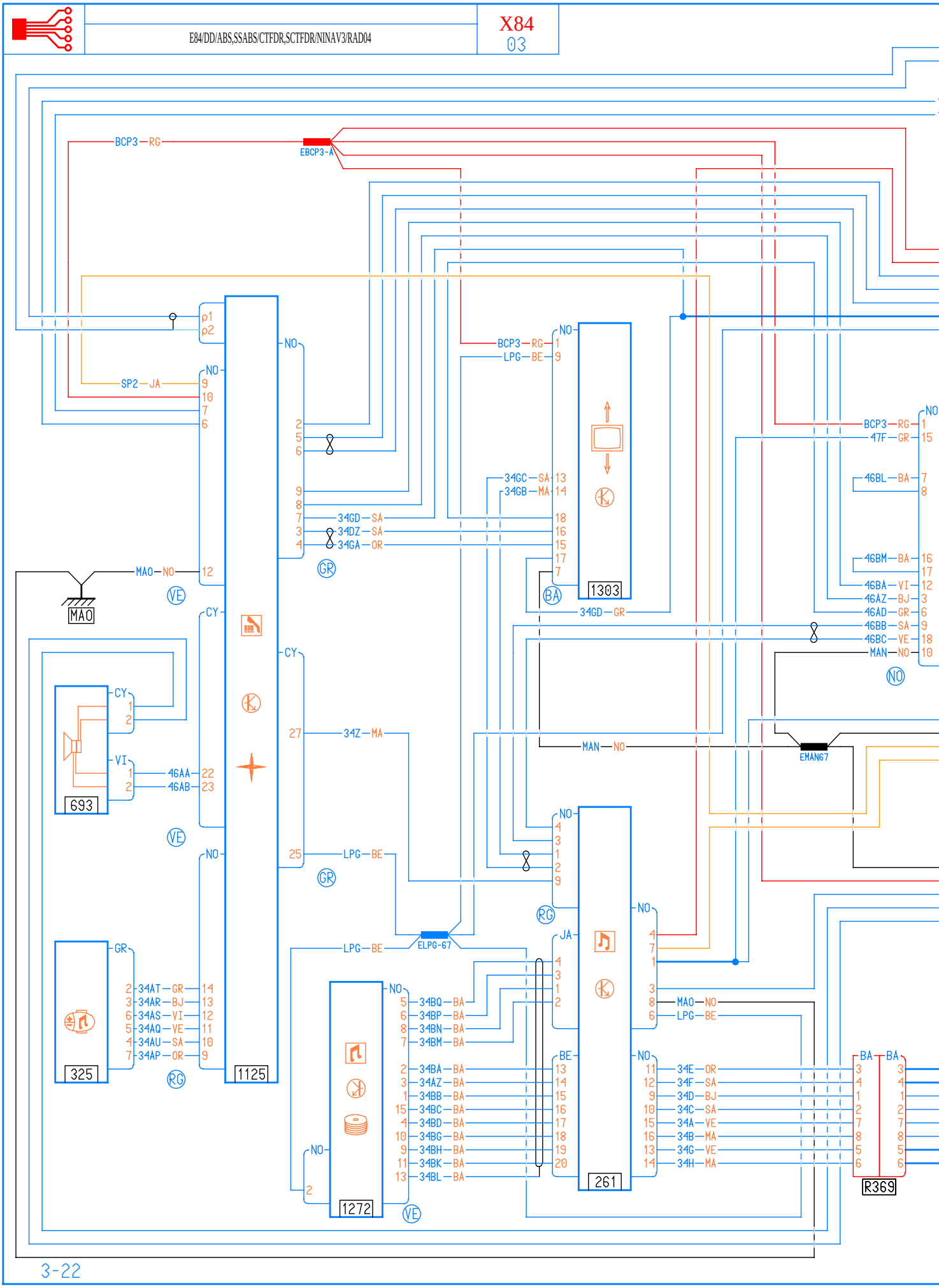
BCP3—RG
EBCP3-A
SP2—JA
MAO—NO
MAO
693
325
1125
1303
261
1272
R369
EMAN67
ELPG-67
34GD—SA
34DZ—SA
34GA—OR
34GC—SA
34GB—MA
34GD—GR
34Z—MA
LPG—BE
MAN—NO
47F—GR
46BL—BA
46BM—BA
46BA—VI
46AZ—BJ
46AD—GR
46BB—SA
46BC—VE
46AA
46AB
34AT—GR
34AR—BJ
34AS—VI
34AQ—VE
34AU—SA
34AP—OR
34BQ—BA
34BP—BA
34BN—BA
34BM—BA
34BA—BA
34AZ—BA
34BB—BA
34BC—BA
34BD—BA
34BG—BA
34BH—BA
34BK—BA
34BL—BA
34E—OR
34F—SA
34D—BJ
34C—SA
34A—VE
34B—MA
34G—VE
34H—MA

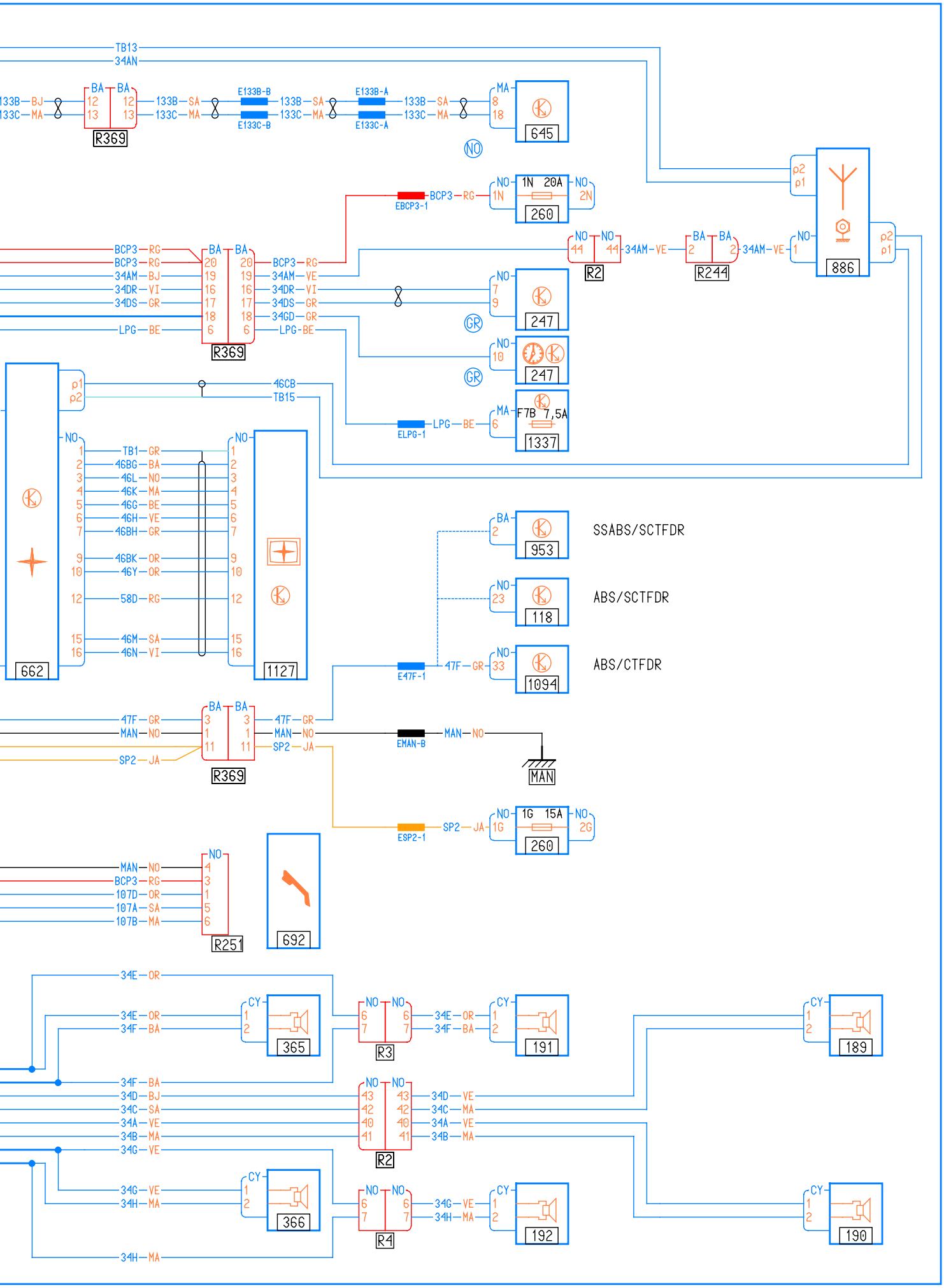
TB13
34AN
133B—BJ
133C—MA
BA 12 13
BA 12 13
R369
133B—SA
133C—MA
E133B-B
E133C-B
E133B-A
E133C-A
MA 8 18
645
NO
EBCP3-1
BCP3—RG
NO 1N
1N 20A
NO 2N
260
p2 p1
886
BCP3—RG
BCP3—RG
34AM—BJ
34DR—VI
34DS—GR
LPG—BE
BA 20 19 16 17 18 6
BA 20 19 16 17 18 6
34AM—VE
34DR—VI
34DS—GR
34GD—GR
LPG-BE
R369
NO 44
NO 44
R2
34AM—VE
BA 2
BA 2
R244
34AM—VE
NO 1
NO 7 9
247
GR
NO 10
247
GR
MA 6
F7B 7,5A
1337
ELPG-1
LPG—BE
p1 p2
46CB
TB15
662
NO 1 2 3 4 5 6 7 9 10 12 15 16
TB1—GR
46BG—BA
46L—NO
46K—MA
46G—BE
46H—VE
46BH—GR
46BK—OR
46Y—OR
58D—RG
46M—SA
46N—VI
NO 1 2 3 4 5 6 7 9 10 12 15 16
1127
BA 2
953
SSABS/SCTFDR
NO 23
118
ABS/SCTFDR
NO 33
1094
ABS/CTFDR
E47F-1
47F—GR
47F—GR
MAN—NO
SP2—JA
BA 3 1 11
BA 3 1 11
R369
47F—GR
MAN—NO
SP2—JA
EMAN-B
MAN—NO
MAN
ESP2-1
SP2—JA
NO 1G
1G 15A
NO 2G
260
MAN—NO
BCP3—RG
107D—OR
107A—SA
107B—MA
NO 4 3 1 5 6
R251
692
34E—OR
CY 1 2
365
34E—OR
34F—BA
NO 6 7
NO 6 7
R3
34E—OR
34F—BA
CY 1 2
191
CY 1 2
189
34F—BA
34D—BJ
34C—SA
34A—VE
34B—MA
34G—VE
NO 43 42 40 41
NO 43 42 40 41
R2
34D—VE
34C—MA
34A—VE
34B—MA
CY 1 2
366
34G—VE
34H—MA
NO 6 7
NO 6 7
R4
34G—VE
34H—MA
CY 1 2
192
CY 1 2
190
34H—MA