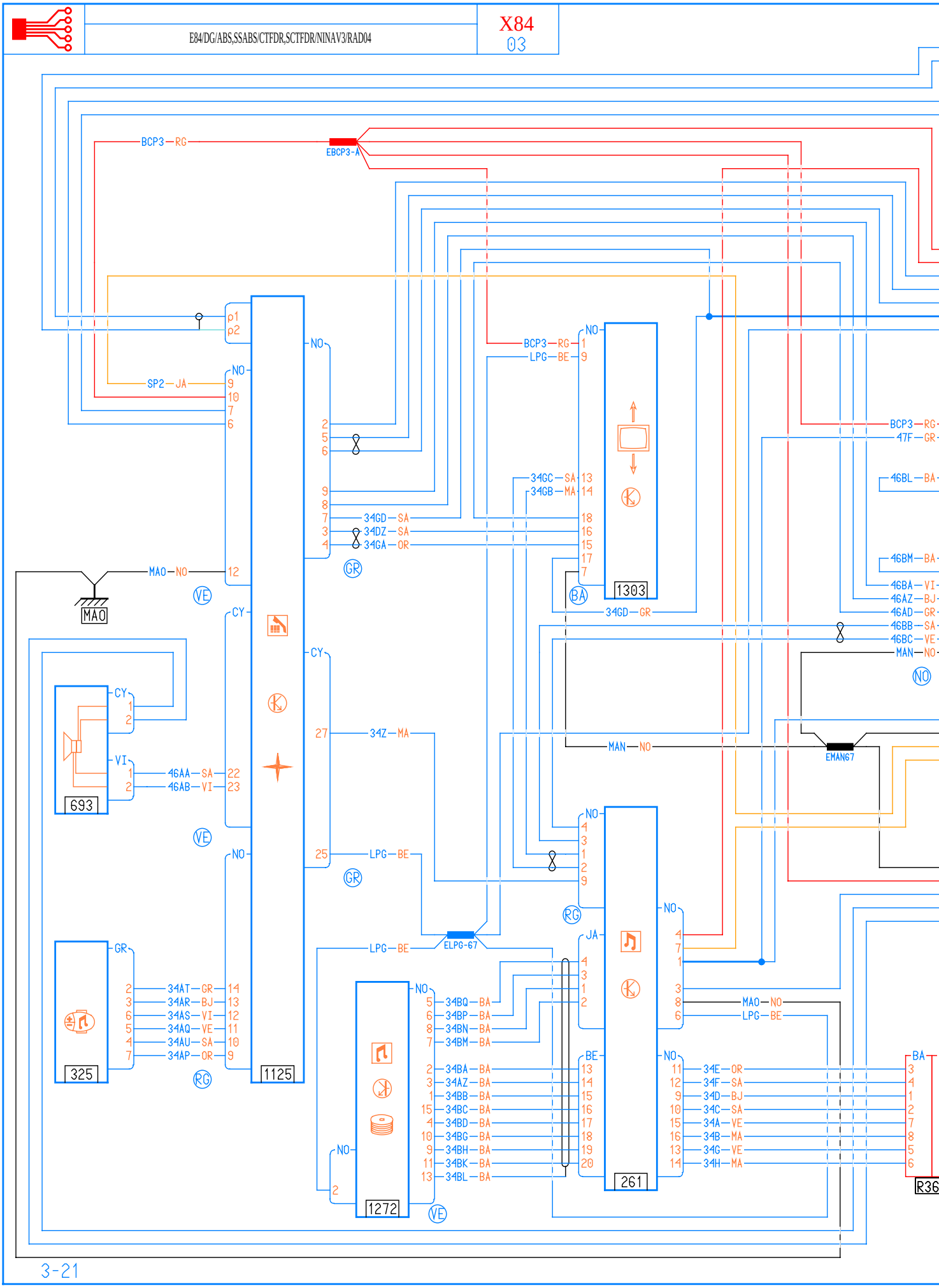
BCP3—RG
EBCP3-A
p1
p2
SP2—JA
NO
9
10
7
6
MAO—NO
12
MAO
VE
CY
1
2
VI
1
2
4GAA—SA
4GAB—VI
22
23
693
GR
2
3
6
5
4
7
34AT—GR
34AR—BJ
34AS—VI
34AQ—VE
34AU—SA
34AP—OR
14
13
12
11
10
9
325
RG
1125
2
5
6
9
8
7
3
4
34GD—SA
34DZ—SA
34GA—OR
27
34Z—MA
25
LPG—BE
ELPG-67
LPG—BE
2
1272
5
6
8
7
34BQ—BA
34BP—BA
34BN—BA
34BM—BA
2
3
1
15
4
10
9
11
13
34BA—BA
34AZ—BA
34BB—BA
34BC—BA
34BD—BA
34BG—BA
34BH—BA
34BK—BA
34BL—BA
BCP3—RG
LPG—BE
1
9
34GC—SA
34GB—MA
13
14
18
16
15
17
7
1303
34GD—GR
4
3
1
2
9
JA
4
3
1
2
BE
13
14
15
16
17
18
19
20
261
4
7
1
3
8
6
MAO—NO
LPG—BE
11
12
9
10
15
16
13
14
34E—OR
34F—SA
34D—BJ
34C—SA
34A—VE
34B—MA
34G—VE
34H—MA
BA
3
4
1
2
7
8
5
6
R36
BCP3—RG
47F—GR
46BL—BA
46BM—BA
46BA—VI
46AZ—BJ
46AD—GR
46BB—SA
46BC—VE
MAN—NO
MAN—NO
EMAN67

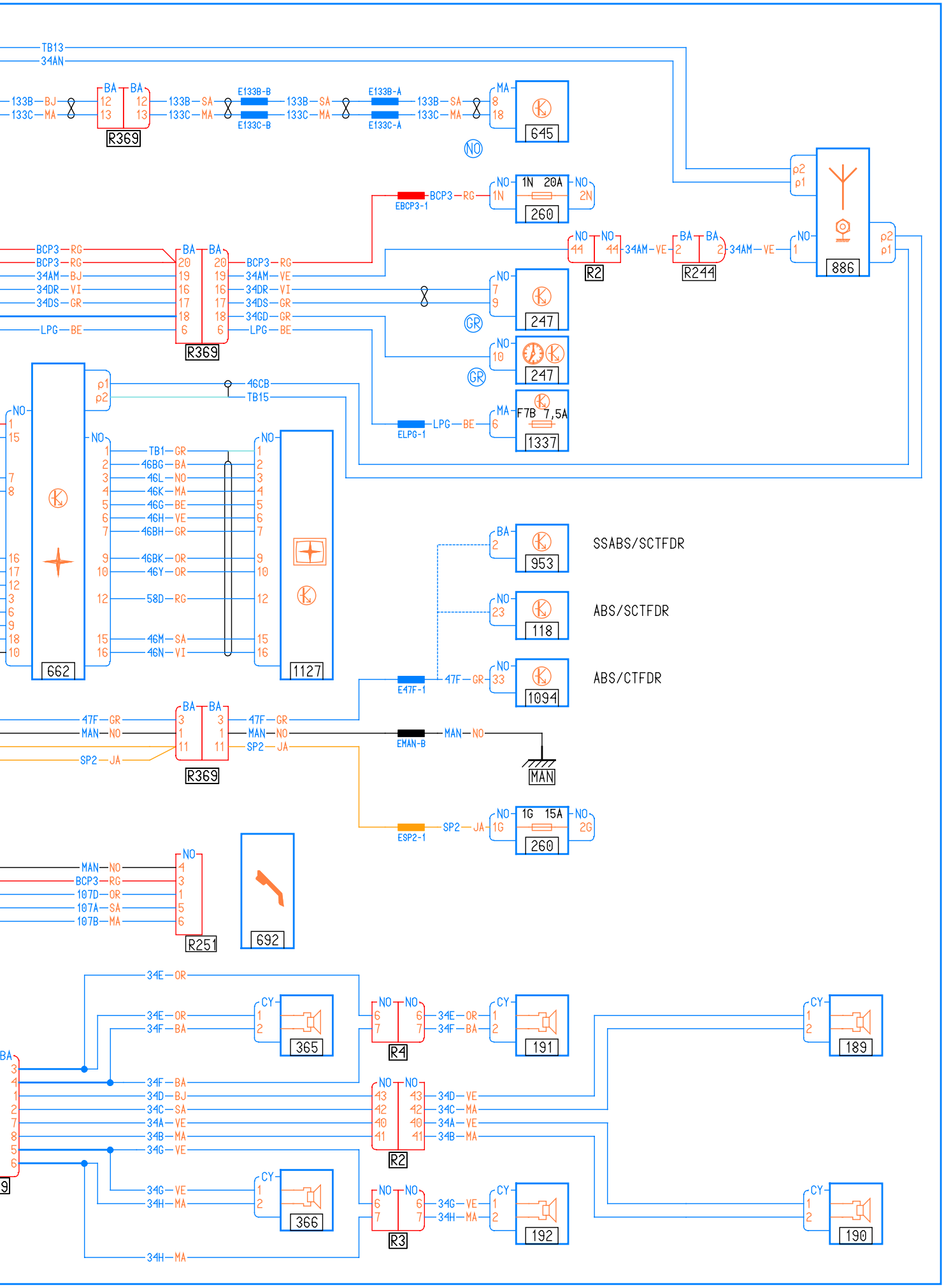
TB13
34AN
133B—BJ
133C—MA
R369
133B—SA
133C—MA
E133B-B
E133C-B
E133B-A
E133C-A
645
NO
EBCP3-1
BCP3—RG
1N 20A
260
886
R2
34AM—VE
R244
247
GR
1337
F7B 7,5A
ELPG-1
LPG—BE
46CB
TB15
662
1127
SSABS/SCTFDR
953
ABS/SCTFDR
118
ABS/CTFDR
1094
E47F-1
47F—GR
MAN—NO
SP2—JA
EMAN-B
MAN
ESP2-1
1G 15A
R251
692
34E—OR
34F—BA
365
R4
191
189
34D—BJ
34C—SA
34A—VE
34B—MA
34G—VE
34H—MA
366
R3
192
190