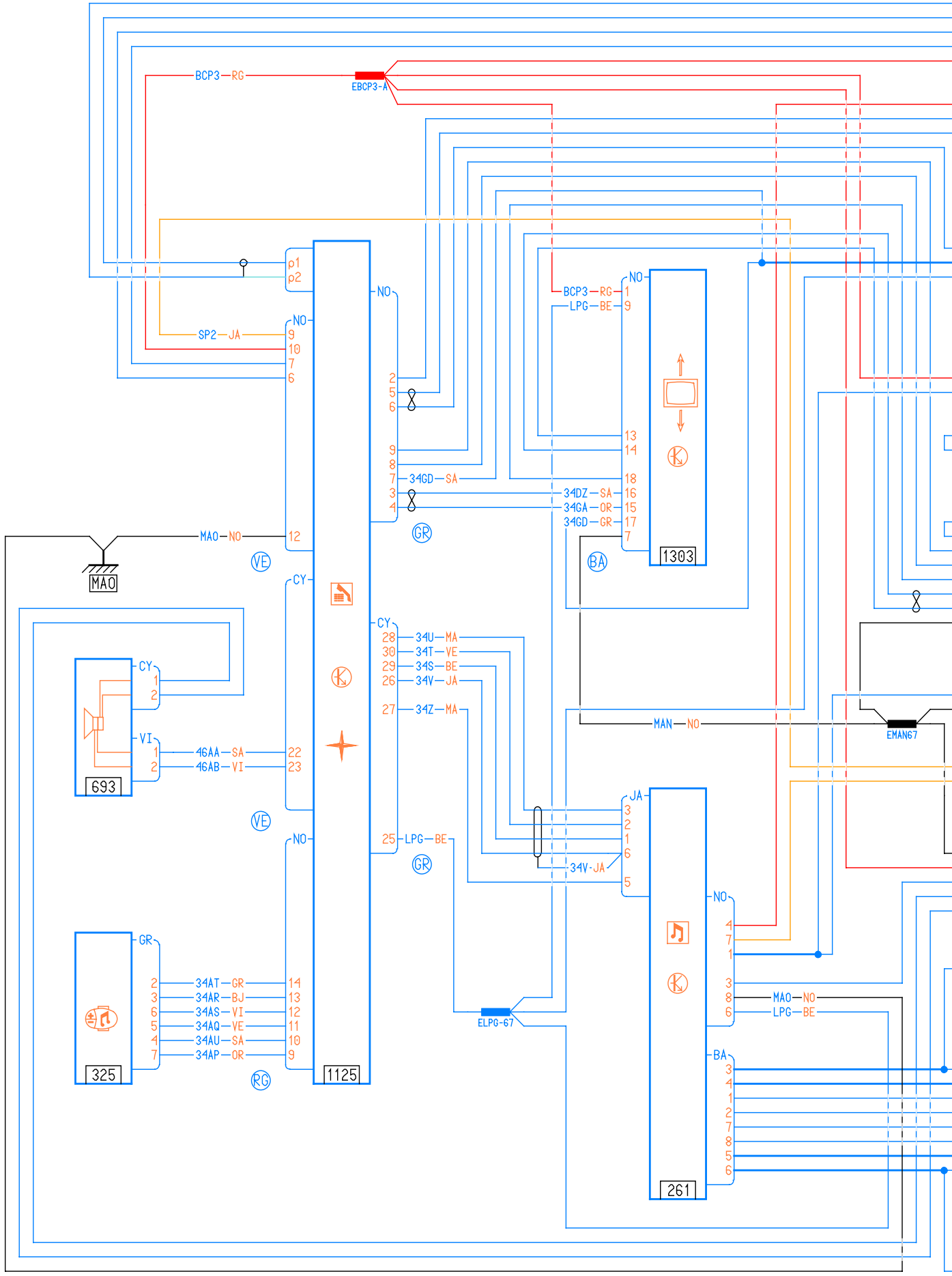
BCP3—RG
EBCP3-A
SP2—JA
MAO—NO
MAO
34GD—SA
34DZ—SA
34GA—OR
34GD—GR
1303
34U—MA
34T—VE
34S—BE
34V—JA
34Z—MA
LPG—BE
34V-JA
MAN—NO
EMAN67
ELPG-67
46AA—SA
46AB—VI
693
34AT—GR
34AR—BJ
34AS—VI
34AQ—VE
34AU—SA
34AP—OR
325
1125
261

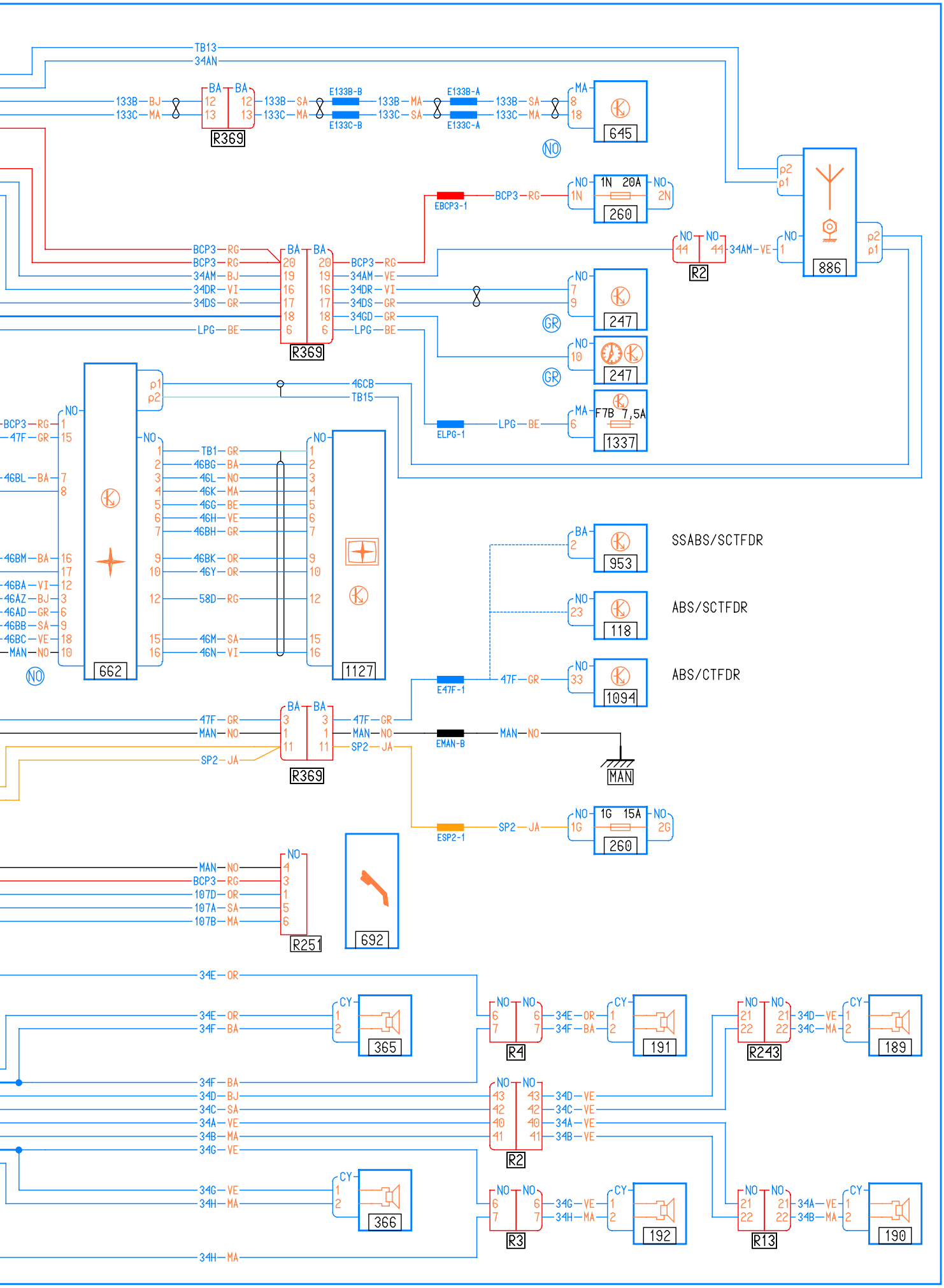
TB13
34AN
133B—BJ
133C—MA
R369
133B—SA
133C—MA
E133B-B
E133C-B
133B—MA
133C—SA
E133B-A
E133C-A
133B—SA
133C—MA
645
NO
EBCP3-1
BCP3—RG
1N 20A
260
886
R2
34AM—VE
BCP3—RG
34AM—BJ
34DR—VI
34DS—GR
LPG—BE
34AM—VE
34DR—VI
34DS—GR
34GD—GR
247
GR
ELPG-1
F7B 7,5A
1337
46CB
TB15
662
1127
TB1—GR
46BG—BA
46L—NO
46K—MA
46G—BE
46H—VE
46BH—GR
46BK—OR
46Y—OR
58D—RG
46M—SA
46N—VI
47F—GR
46BL—BA
46BM—BA
46BA—VI
46AZ—BJ
46AD—GR
46BB—SA
46BC—VE
MAN—NO
953
SSABS/SCTFDR
118
ABS/SCTFDR
1094
ABS/CTFDR
E47F-1
MAN—NO
EMAN-B
MAN
SP2—JA
ESP2-1
1G 15A
MAN—NO
BCP3—RG
107D—OR
107A—SA
107B—MA
R251
692
34E—OR
34F—BA
365
R4
191
R243
189
34D—VE
34C—MA
34C—SA
34A—VE
34B—MA
34G—VE
34H—MA
366
R3
192
R13
190