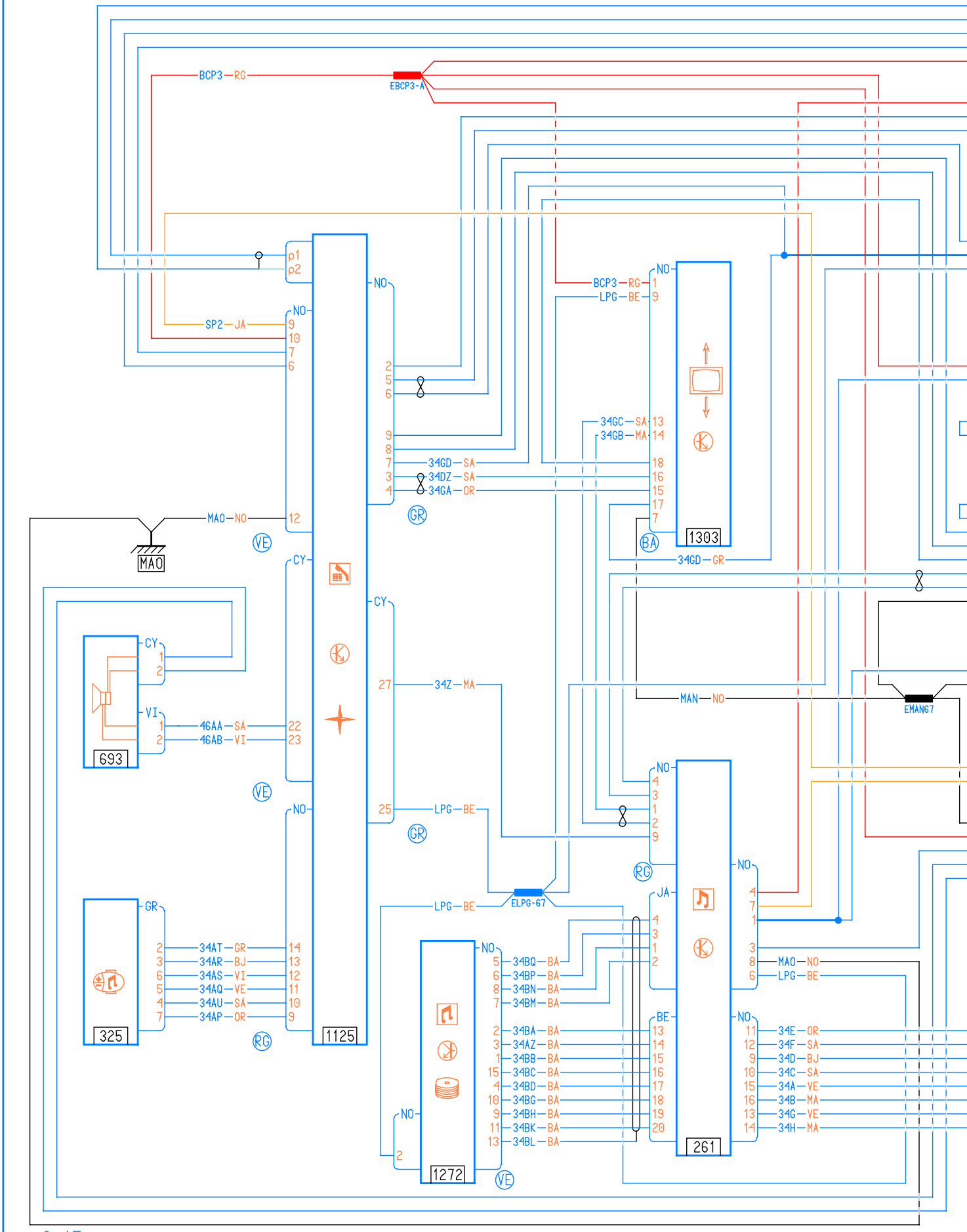
BCP3—RG
EBCP3-A
SP2—JA
MAO—NO
MAO
34GD—SA
34DZ—SA
34GA—OR
34GC—SA
34GB—MA
34GD—GR
1303
34Z—MA
MAN—NO
EMAN67
46AA—SA
46AB—VI
693
LPG—BE
ELPG-67
34AT—GR
34AR—BJ
34AS—VI
34AQ—VE
34AU—SA
34AP—OR
325
1125
34BQ—BA
34BP—BA
34BN—BA
34BM—BA
34BA—BA
34AZ—BA
34BB—BA
34BC—BA
34BD—BA
34BG—BA
34BH—BA
34BK—BA
34BL—BA
1272
261
34E—OR
34F—SA
34D—BJ
34C—SA
34A—VE
34B—MA
34G—VE
34H—MA

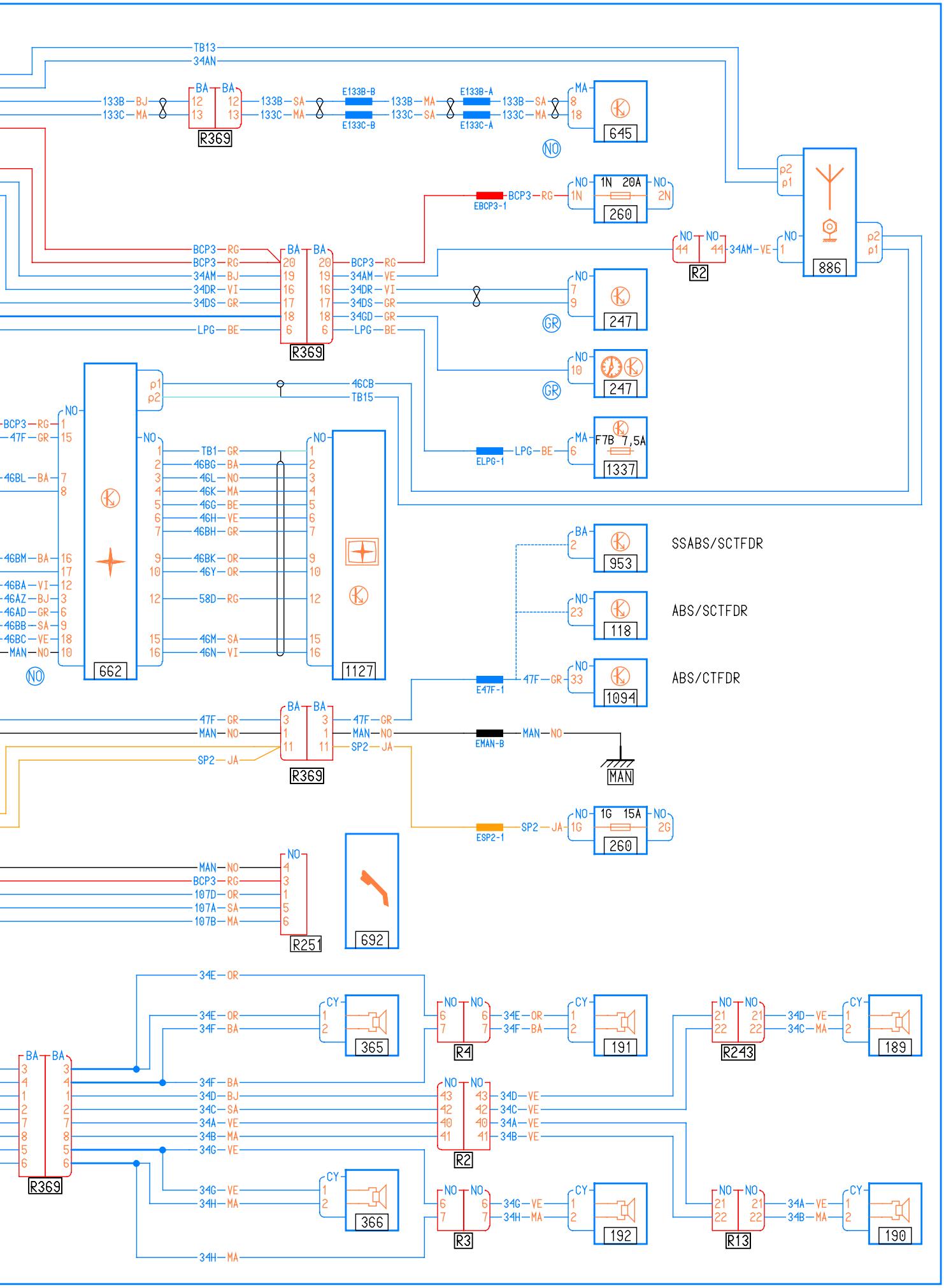
TB13
34AN
133B—BJ
133C—MA
R369
133B—SA
133C—MA
E133B-B
E133C-B
133B—MA
133C—SA
E133B-A
E133C-A
133B—SA
133C—MA
645
NO
EBCP3-1
BCP3—RG
1N 20A
260
886
R2
34AM—VE
BCP3—RG
34AM—BJ
34DR—VI
34DS—GR
LPG—BE
34AM—VE
34DR—VI
34DS—GR
34GD—GR
LPG—BE
247
GR
46CB
TB15
ELPG-1
F7B 7,5A
1337
662
1127
TB1—GR
46BG—BA
46L—NO
46K—MA
46G—BE
46H—VE
46BH—GR
46BK—OR
46Y—OR
58D—RG
46M—SA
46N—VI
46BL—BA
46BM—BA
46BA—VI
46AZ—BJ
46AD—GR
46BB—SA
46BC—VE
MAN—NO
953
SSABS/SCTFDR
118
ABS/SCTFDR
1094
ABS/CTFDR
E47F-1
47F—GR
MAN—NO
SP2—JA
EMAN-B
MAN
ESP2-1
1G 15A
R251
692
34E—OR
34F—BA
365
R4
191
R243
189
34D—VE
34C—SA
34A—VE
34B—MA
34G—VE
34H—MA
366
R3
192
R13
190