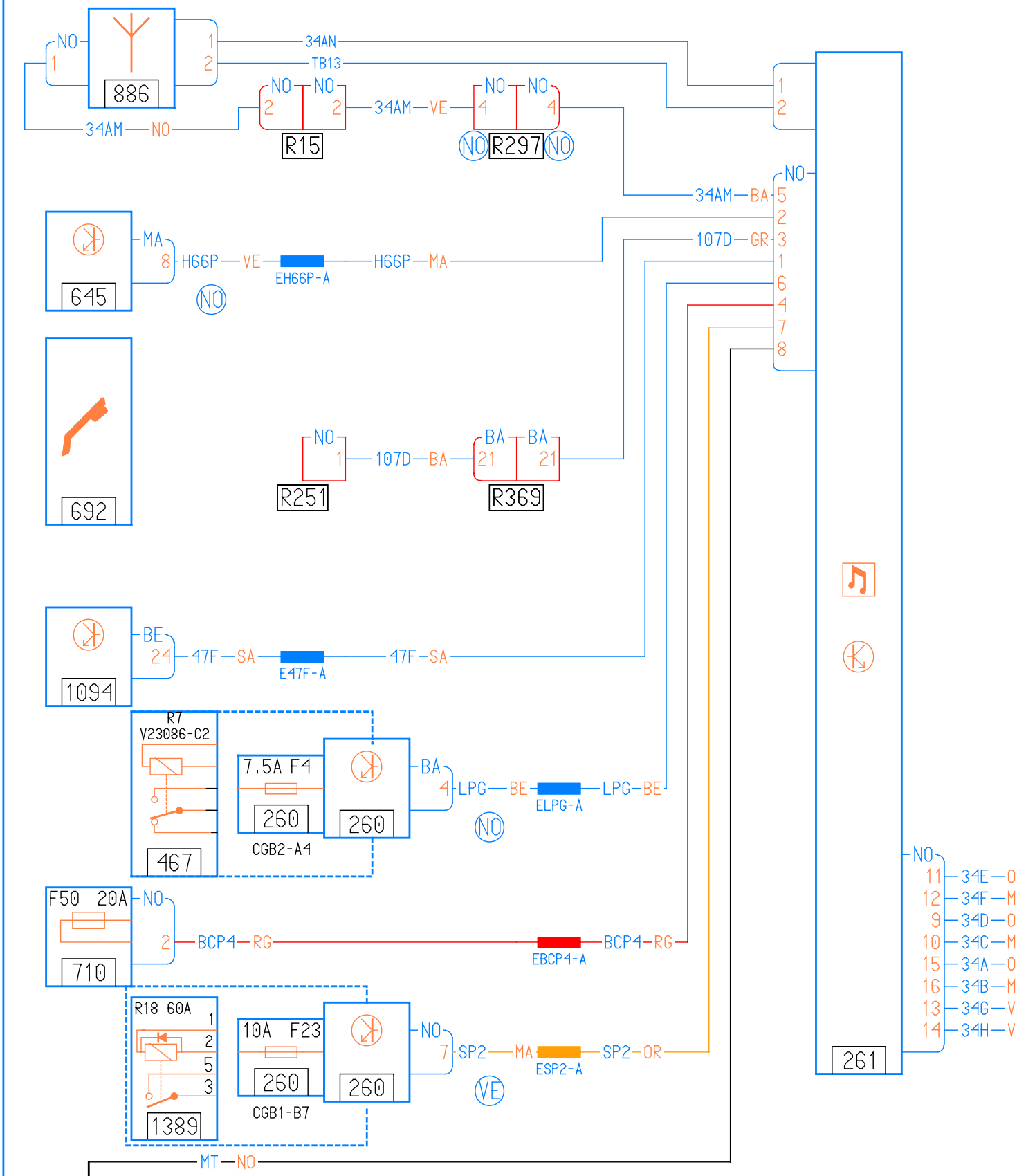
886
NO
1
1
2
34AN
TB13
34AM
NO
R15
34AM
VE
R297
NO
34AM
BA
107D
GR
645
MA
8
H66P
VE
EH66P-A
H66P
MA
692
R251
107D
BA
R369
1094
BE
24
47F
SA
E47F-A
47F
SA
R7
V23086-C2
467
7.5A F4
260
CGB2-A4
BA
4
LPG
BE
ELPG-A
LPG
BE
F50 20A
710
2
BCP4
RG
EBCP4-A
BCP4
RG
R18 60A
1389
10A F23
CGB1-B7
7
SP2
MA
ESP2-A
SP2
OR
VE
261
11
12
9
10
15
16
13
14
34E
34F
34D
34C
34A
34B
34G
34H
MT
NO
MT

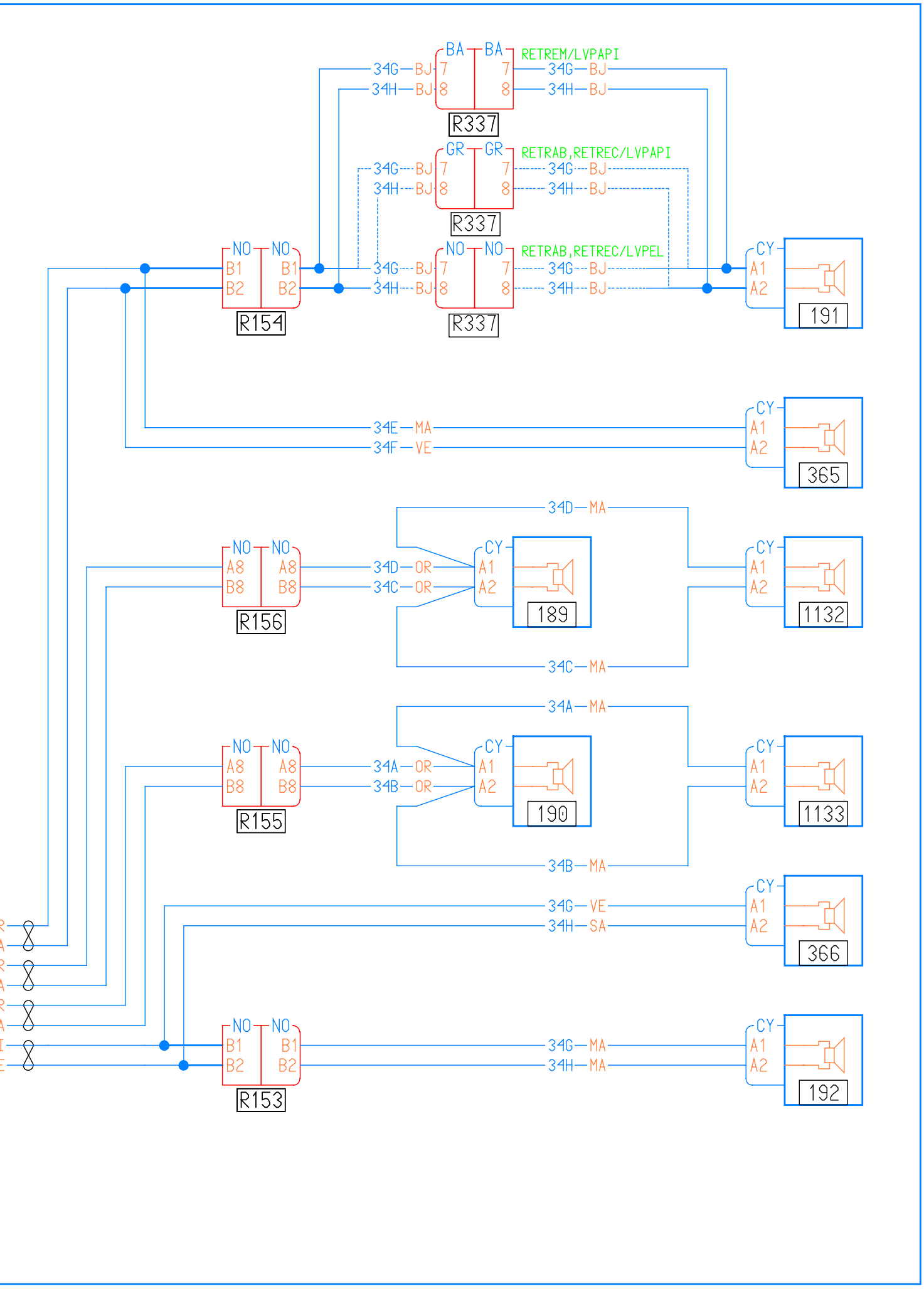
BA BA
RETREM/LVPAPI
34G—BJ 7 7 34G—BJ
34H—BJ 8 8 34H—BJ
R337
GR GR
RETRAB,RETREC/LVPAPI
34G—BJ 7 7 34G—BJ
34H—BJ 8 8 34H—BJ
R337
NO NO
RETRAB,RETREC/LVPEL
B1 B1 34G—BJ 7 7 34G—BJ
B2 B2 34H—BJ 8 8 34H—BJ
R154
R337
CY
A1
A2
191
34E—MA
34F—VE
365
34D—MA
A8 A8 34D—OR
B8 B8 34C—OR
R156
189
1132
34C—MA
34A—MA
A8 A8 34A—OR
B8 B8 34B—OR
R155
190
1133
34B—MA
34G—VE
34H—SA
366
B1 B1 34G—MA
B2 B2 34H—MA
R153
192