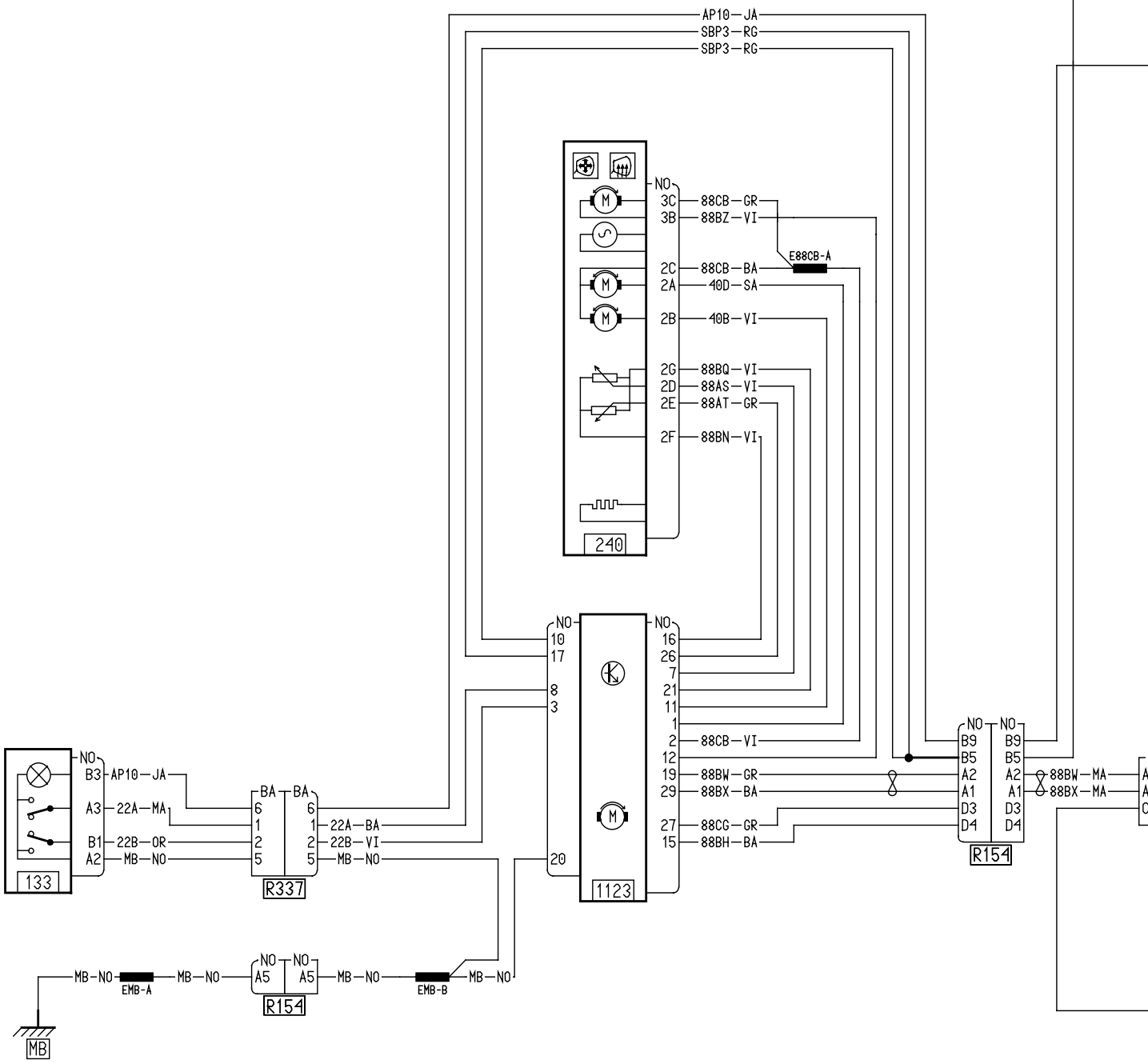
AP10—JA
SBP3—RG
SBP3—RG
NO
3C 88CB—GR
3B 88BZ—VI
E88CB-A
2C 88CB—BA
2A 40D—SA
2B 40B—VI
2G 88BQ—VI
2D 88AS—VI
2E 88AT—GR
2F 88BN—VI
240
NO
10
17
8
3
20
NO
16
26
7
21
11
1
2 88CB—VI
12
19 88BW—GR
29 88BX—BA
27 88CG—GR
15 88BH—BA
1123
NO
B9
B5
A2
A1
D3
D4
R154
88BW—MA
88BX—MA
NO
B3 AP10—JA
A3 22A—MA
B1 22B—OR
A2 MB—NO
133
BA
6
1
2
5
R337
22A—BA
22B—VI
MB—NO
MB—NO
EMB-A
MB—NO
NO
A5
R154
MB—NO
EMB-B
MB—NO
MB

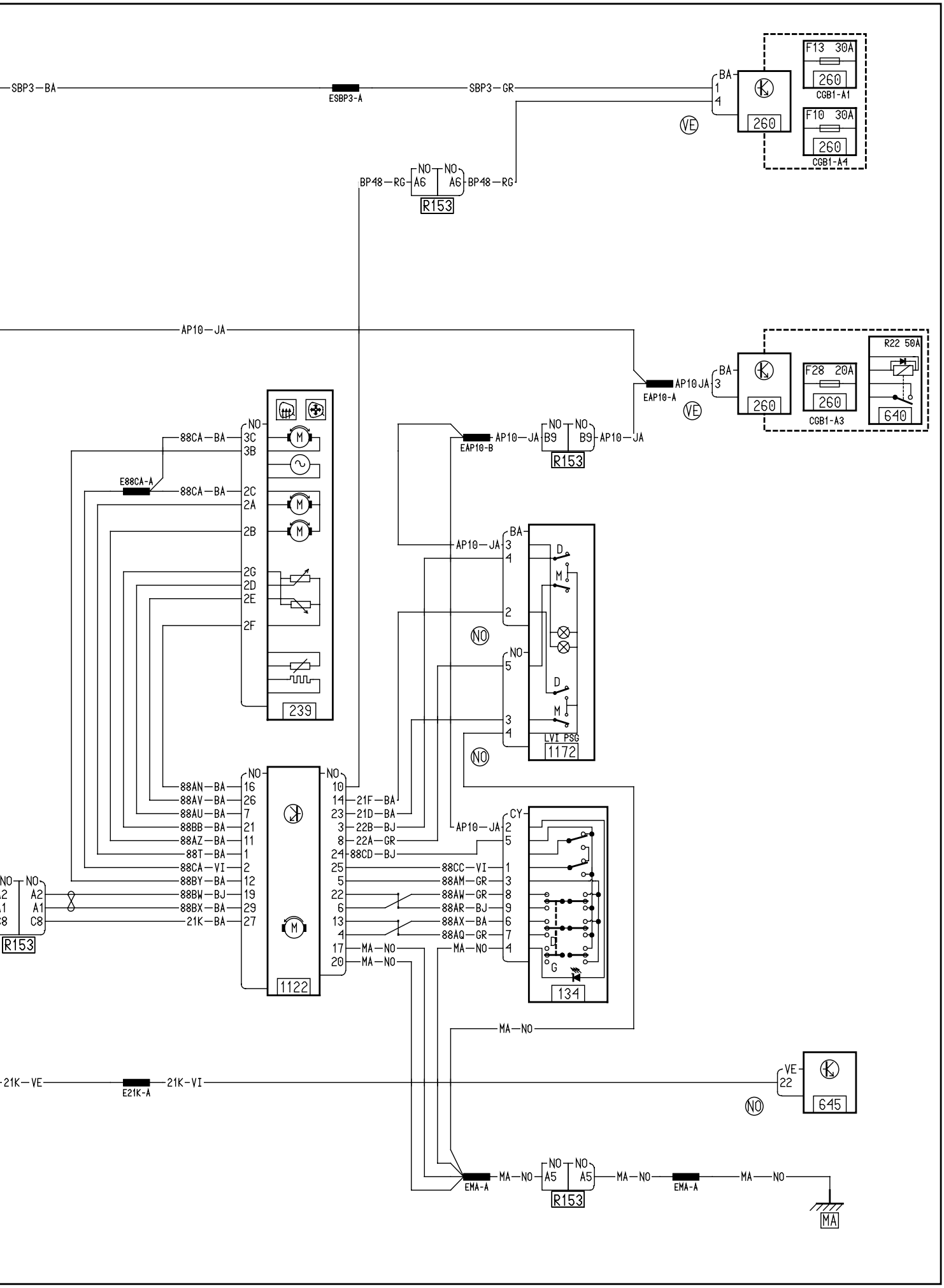
SBP3—BA
ESBP3-A
SBP3—GR
BA
1
4
260
F13 30A
260
CGB1-A1
F10 30A
260
CGB1-A1
VE
BP48—RG
NO
A6
NO
A6
BP48—RG
R153
AP10—JA
AP10JA
EAP10-A
BA
3
260
F28 20A
260
CGB1-A3
R22 50A
640
VE
EAP10-B
AP10—JA
NO
B9
NO
B9
AP10—JA
R153
NO
3C
3B
88CA—BA
E88CA-A
88CA—BA
2C
2A
2B
2G
2D
2E
2F
239
AP10—JA
BA
3
4
2
NO
5
3
4
LVI PSG
1172
NO
NO
88AN—BA
88AV—BA
88AU—BA
88BB—BA
88AZ—BA
88T—BA
88CA—VI
88BY—BA
88BW—BJ
88BX—BA
21K—BA
16
26
7
21
11
1
2
12
19
29
27
1122
NO
10
14
23
3
8
24
25
5
22
6
13
4
17
20
21F—BA
21D—BA
22B—BJ
22A—GR
88CD—BJ
88CC—VI
88AM—GR
88AW—GR
88AR—BJ
88AX—BA
88AQ—GR
MA—NO
MA—NO
AP10—JA
CY
2
5
1
3
8
9
6
7
4
134
NO
A2
NO
A1
C8
R153
MA—NO
21K—VE
E21K-A
21K-VI
VE
22
645
NO
EMA-A
MA—NO
NO
A5
NO
A5
R153
MA—NO
EMA-A
MA—NO
MA