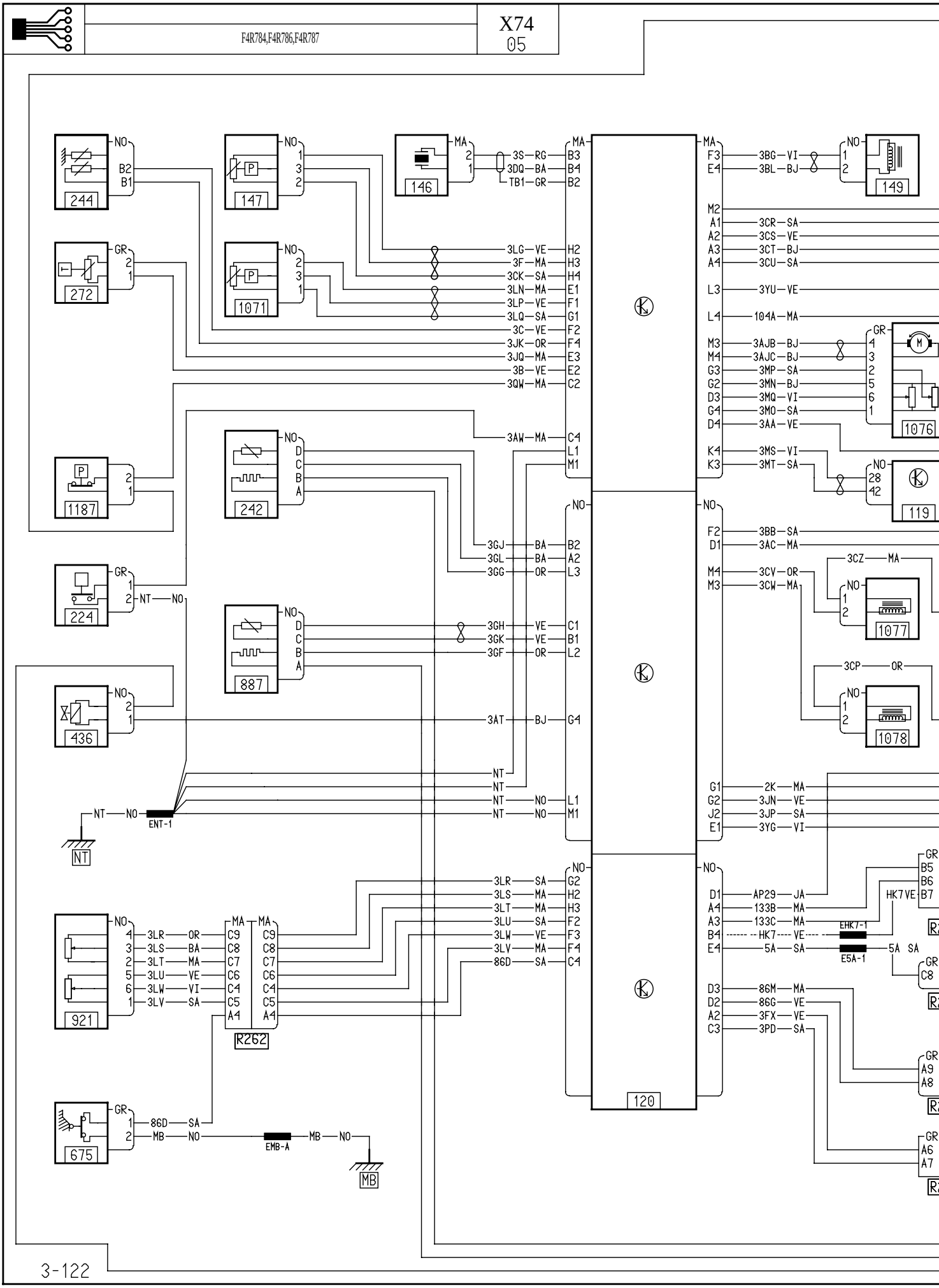
244
147
146
149
272
1071
1076
1187
242
119
224
1077
887
436
1078
ENT-1
NT
921
R262
675
EMB-A
MB
120
EHK7-1
E5A-1
3S—RG
3DQ—BA
TB1—GR
3LG—VE
3F—MA
3CK—SA
3LN—MA
3LP—VE
3LQ—SA
3C—VE
3JK—OR
3JQ—MA
3B—VE
3QW—MA
3AW—MA
3GJ—BA
3GL—BA
3GG—OR
3GH—VE
3GK—VE
3GF—OR
3AT—BJ
3LR—SA
3LS—MA
3LT—MA
3LU—SA
3LW—VE
3LV—MA
86D—SA
3BG—VI
3BL—BJ
3CR—SA
3CS—VE
3CT—BJ
3CU—SA
3YU—VE
104A—MA
3AJB—BJ
3AJC—BJ
3MP—SA
3MN—BJ
3MQ—VI
3MO—SA
3AA—VE
3MS—VI
3MT—SA
3BB—SA
3AC—MA
3CZ—MA
3CV—OR
3CW—MA
3CP—OR
2K—MA
3JN—VE
3JP—SA
3YG—VI
AP29—JA
133B—MA
133C—MA
HK7—VE
5A—SA
86M—MA
86G—VE
3FX—VE
3PD—SA

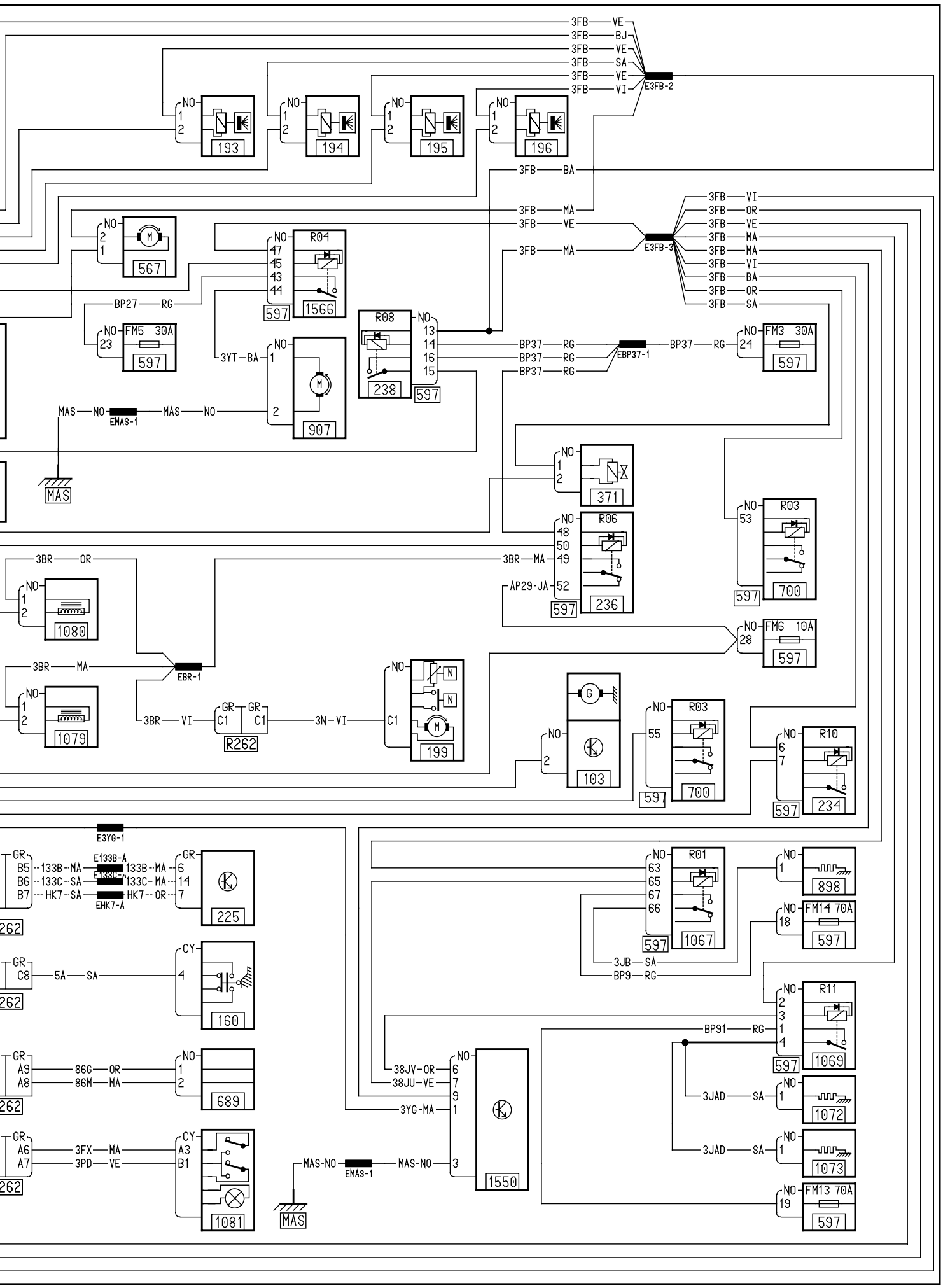
3FB VE
3FB BJ
3FB VE
3FB SA
3FB VE
3FB VI
E3FB-2
NO 1 2 193
NO 1 2 194
NO 1 2 195
NO 1 2 196
3FB BA
3FB MA
3FB VE
3FB VI
3FB OR
3FB VE
3FB MA
3FB MA
3FB VI
3FB BA
3FB OR
3FB SA
E3FB-3
NO 2 1 567
NO 47 45 43 44 R04 597 1566
BP27 RG
NO 23 FM5 30A 597
3YT-BA
NO 1 2 907
R08 NO 13 14 16 15 238 597
BP37 RG
BP37 RG
BP37 RG
EBP37-1
BP37 RG
NO 24 FM3 30A 597
MAS NO EMAS-1 MAS NO
MAS
NO 1 2 371
NO 53 R03 597 700
NO 48 50 49 52 R06 597 236
3BR OR
3BR MA
AP29-JA
NO 28 FM6 10A 597
NO 1 2 1080
3BR MA
EBR-1
NO 1 2 1079
3BR VI
GR C1 GR C1 R262
3N-VI
NO N N M C1 199
NO G 2 103
NO 55 R03 597 700
NO 6 7 R10 597 234
E3YG-1
GR B5 133B-MA E133B-A 133B-MA 6
B6 133C-SA E133C-A 133C-MA 14
B7 HK7-SA EHK7-A HK7-OR 7
262
225
GR C8 5A SA
262
CY 4 160
GR A9 86G OR
A8 86M MA
262
NO 1 2 689
GR A6 3FX MA
A7 3PD VE
262
CY A3 B1 1081
MAS-NO EMAS-1 MAS-NO
MAS
NO 63 65 67 66 R01 597 1067
3JB SA
BP9 RG
NO 1 898
NO 18 FM14 70A 597
NO 2 3 1 4 R11 597 1069
BP91 RG
38JV-OR
38JU-VE
3YG-MA
NO 6 7 9 1 3 1550
3JAD SA
NO 1 1072
3JAD SA
NO 1 1073
NO 19 FM13 70A 597