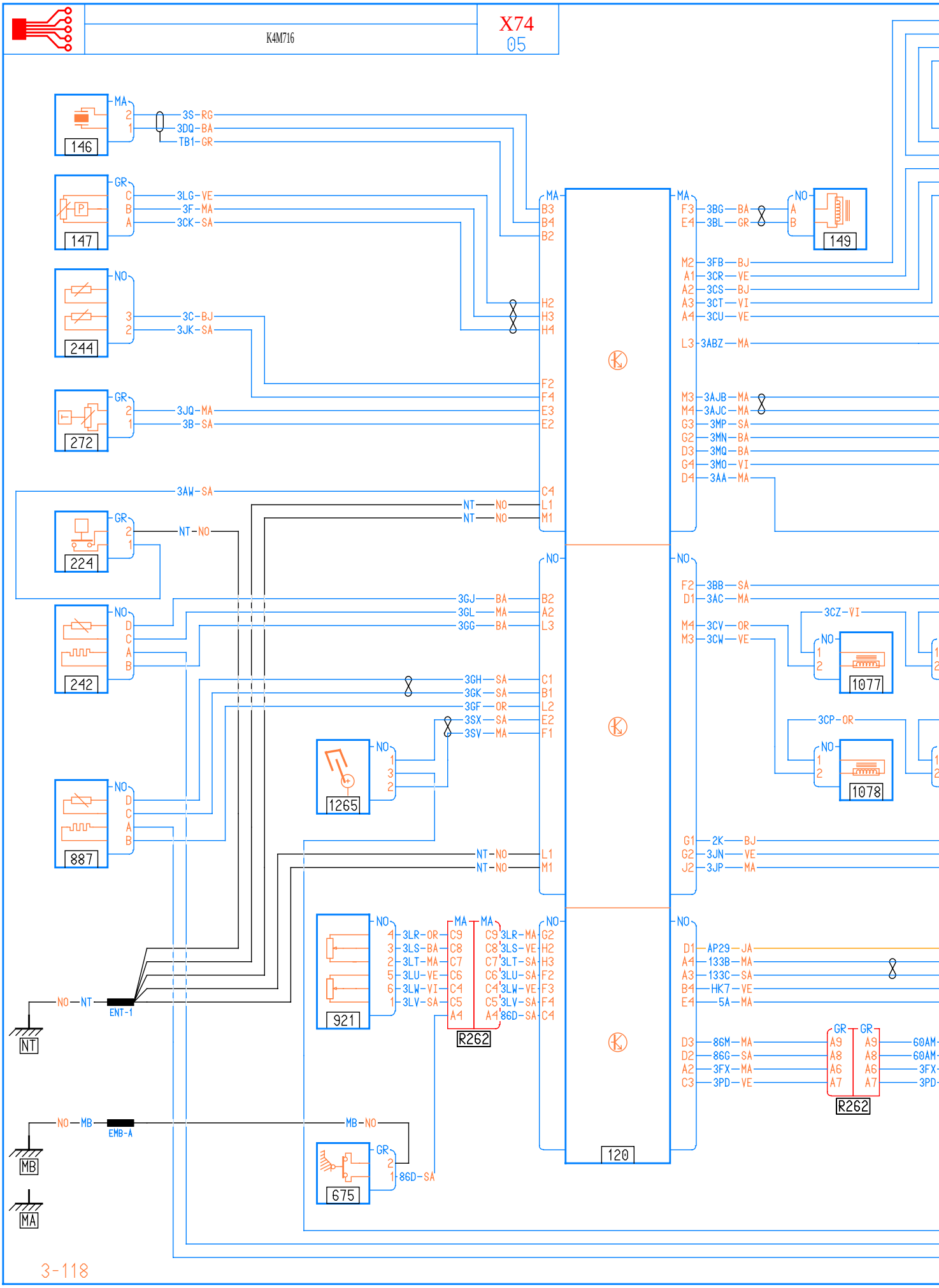
K4M716
X74
05
146
147
244
272
224
242
887
1265
921
675
149
1077
1078
R262
120
ENT-1
EMB-A
NT
MB
MA
3S-RG
3DQ-BA
TB1-GR
3LG-VE
3F-MA
3CK-SA
3C-BJ
3JK-SA
3JQ-MA
3B-SA
3AW-SA
NT-NO
3GJ-BA
3GL-MA
3GG-BA
3GH-SA
3GK-SA
3GF-OR
3SX-SA
3SV-MA
3LR-OR
3LS-BA
3LT-MA
3LU-VE
3LW-VI
3LV-SA
3LR-MA
3LS-VE
3LT-SA
3LU-SA
3LW-VE
3LV-SA
86D-SA
NO-NT
NO-MB
MB-NO
3BG-BA
3BL-GR
3FB-BJ
3CR-VE
3CS-BJ
3CT-VI
3CU-VE
3ABZ-MA
3AJB-MA
3AJC-MA
3MP-SA
3MN-BA
3MQ-BA
3MO-VI
3AA-MA
3BB-SA
3AC-MA
3CZ-VI
3CV-OR
3CW-VE
3CP-OR
2K-BJ
3JN-VE
3JP-MA
AP29-JA
133B-MA
133C-SA
HK7-VE
5A-MA
86M-MA
86G-SA
3FX-MA
3PD-VE
60AM
3FX
3PD

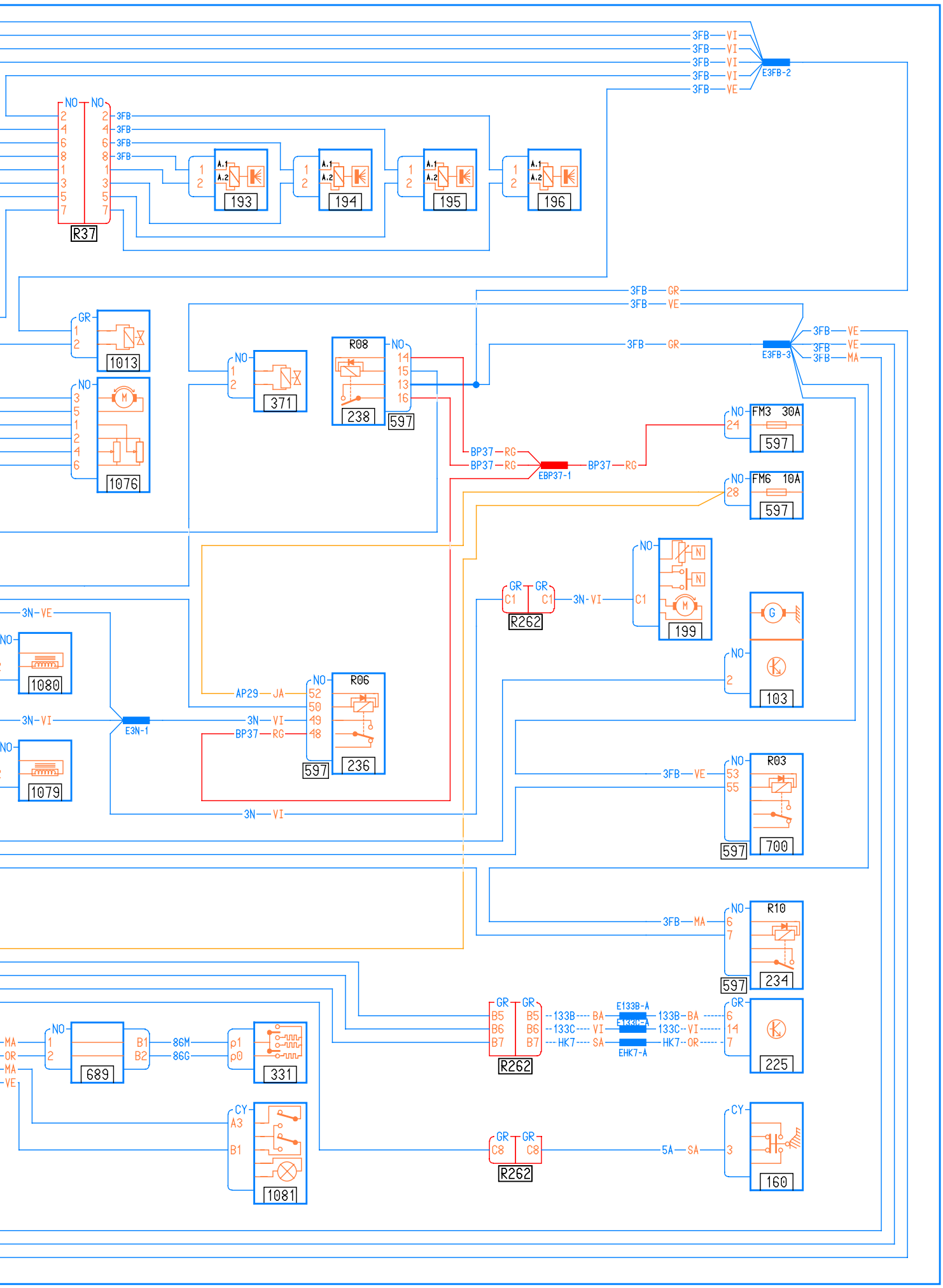
3FB VI
3FB VI
3FB VI
3FB VI
3FB VE
E3FB-2
NO NO
2 4 6 8 1 3 5 7
3FB
R37
193
194
195
196
GR
1013
1076
371
R08
238
597
3FB GR
3FB VE
3FB GR
E3FB-3
3FB VE
3FB VE
3FB MA
FM3 30A
FM6 10A
BP37 RG
EBP37-1
3N VE
1080
1079
3N VI
E3N-1
AP29 JA
R06
236
R262
3N VI
199
103
R03
700
R10
234
689
331
86M
86G
133B BA
133C VI
HK7 SA
E133B-A
EHK7-A
225
CY
A3
B1
1081
5A SA
160