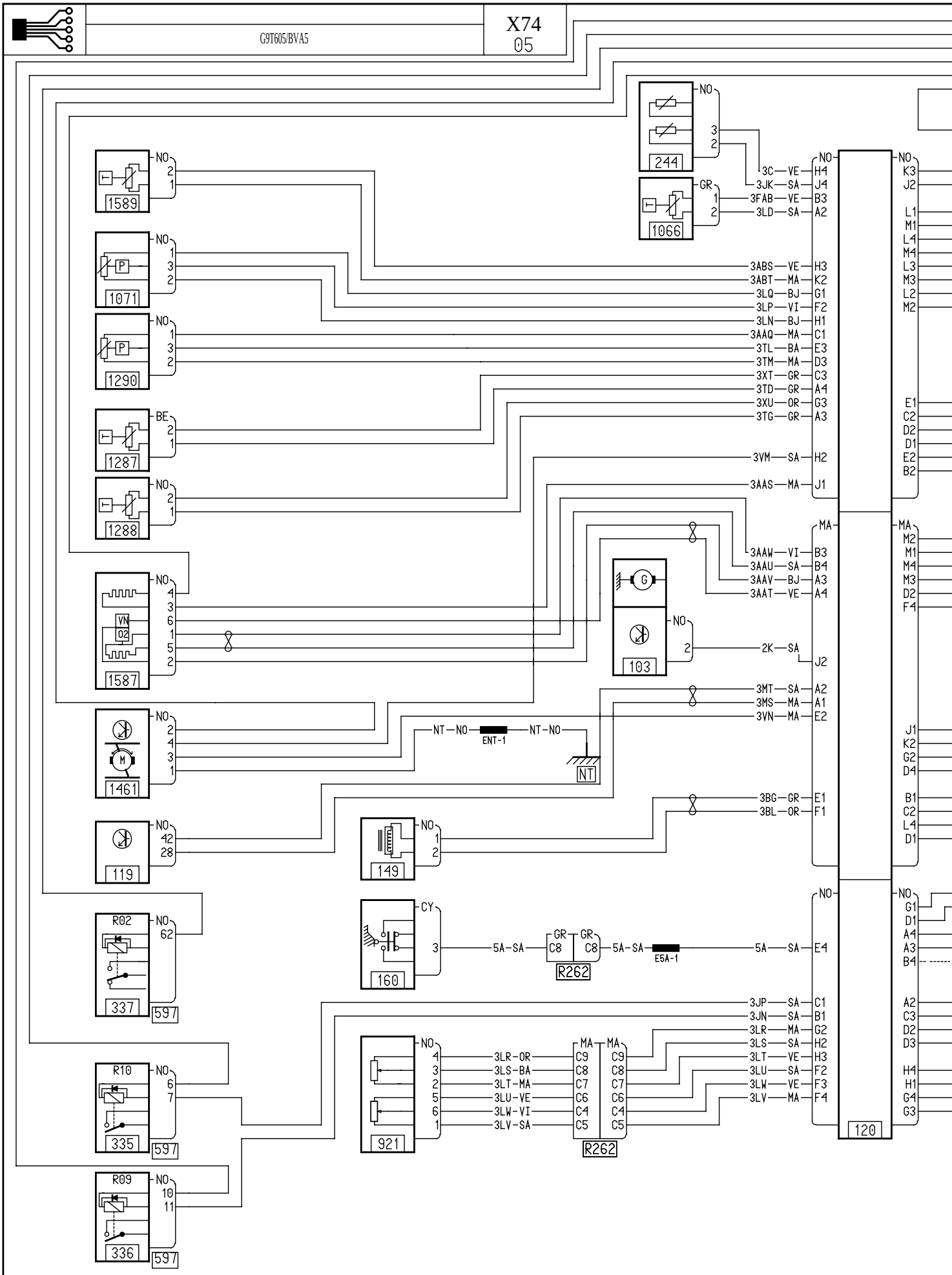
G9T605/BVA5
X74
05
244
1066
1589
1071
1290
1287
1288
1587
103
1461
119
149
R02
337
597
160
R262
921
R10
335
R09
336
120
3C—VE
3JK—SA
3FAB—VE
3LD—SA
3ABS—VE
3ABT—MA
3LQ—BJ
3LP—VI
3LN—BJ
3AAQ—MA
3TL—BA
3TM—MA
3XT—GR
3TD—GR
3XU—OR
3TG—GR
3VM—SA
3AAS—MA
3AAW—VI
3AAU—SA
3AAV—BJ
3AAT—VE
2K—SA
3MT—SA
3MS—MA
3VN—MA
NT—NO
ENT-1
NT-NO
3BG—GR
3BL—OR
5A-SA
E5A-1
5A—SA
3JP—SA
3JN—SA
3LR—MA
3LS—SA
3LT—VE
3LU—SA
3LW—VE
3LV—MA
3LR-OR
3LS-BA
3LT-MA
3LU-VE
3LW-VI
3LV-SA

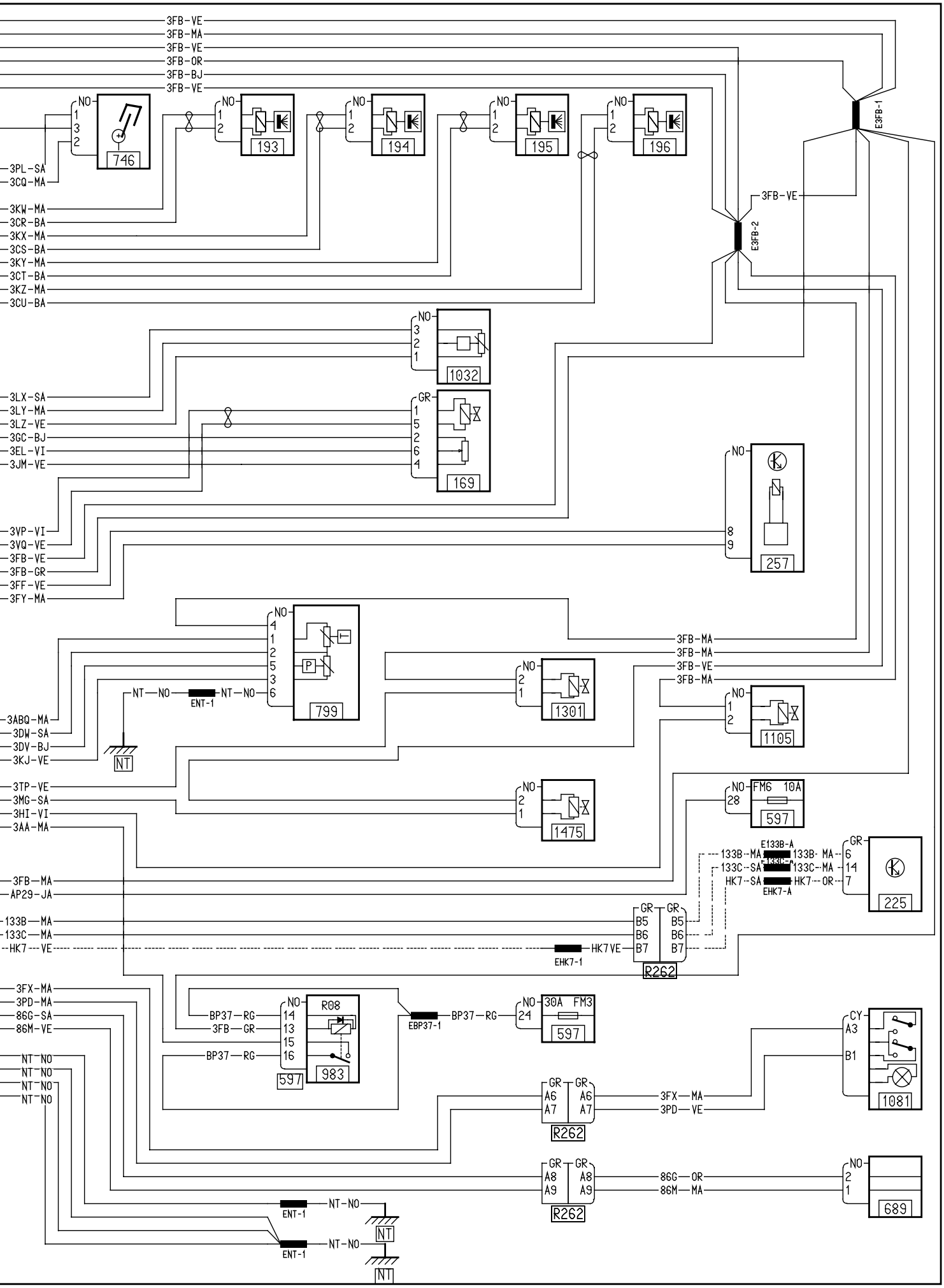
3FB-VE
3FB-MA
3FB-VE
3FB-OR
3FB-BJ
3FB-VE
E3FB-1
E3FB-2
746
193
194
195
196
3PL-SA
3CQ-MA
3KW-MA
3CR-BA
3KX-MA
3CS-BA
3KY-MA
3CT-BA
3KZ-MA
3CU-BA
1032
169
3LX-SA
3LY-MA
3LZ-VE
3GC-BJ
3EL-VI
3JM-VE
257
3VP-VI
3VQ-VE
3FB-VE
3FB-GR
3FF-VE
3FY-MA
799
ENT-1
NT
3ABQ-MA
3DW-SA
3DV-BJ
3KJ-VE
1301
1105
1475
597
FM6 10A
3TP-VE
3MG-SA
3HI-VI
3AA-MA
3FB-MA
AP29-JA
E133B-A
EHK7-A
133B-MA
133C-SA
HK7-SA
225
133B-MA
133C-MA
HK7-VE
EHK7-1
R262
3FX-MA
3PD-MA
86G-SA
86M-VE
R08
983
BP37-RG
3FB-GR
EBP37-1
30A FM3
1081
689