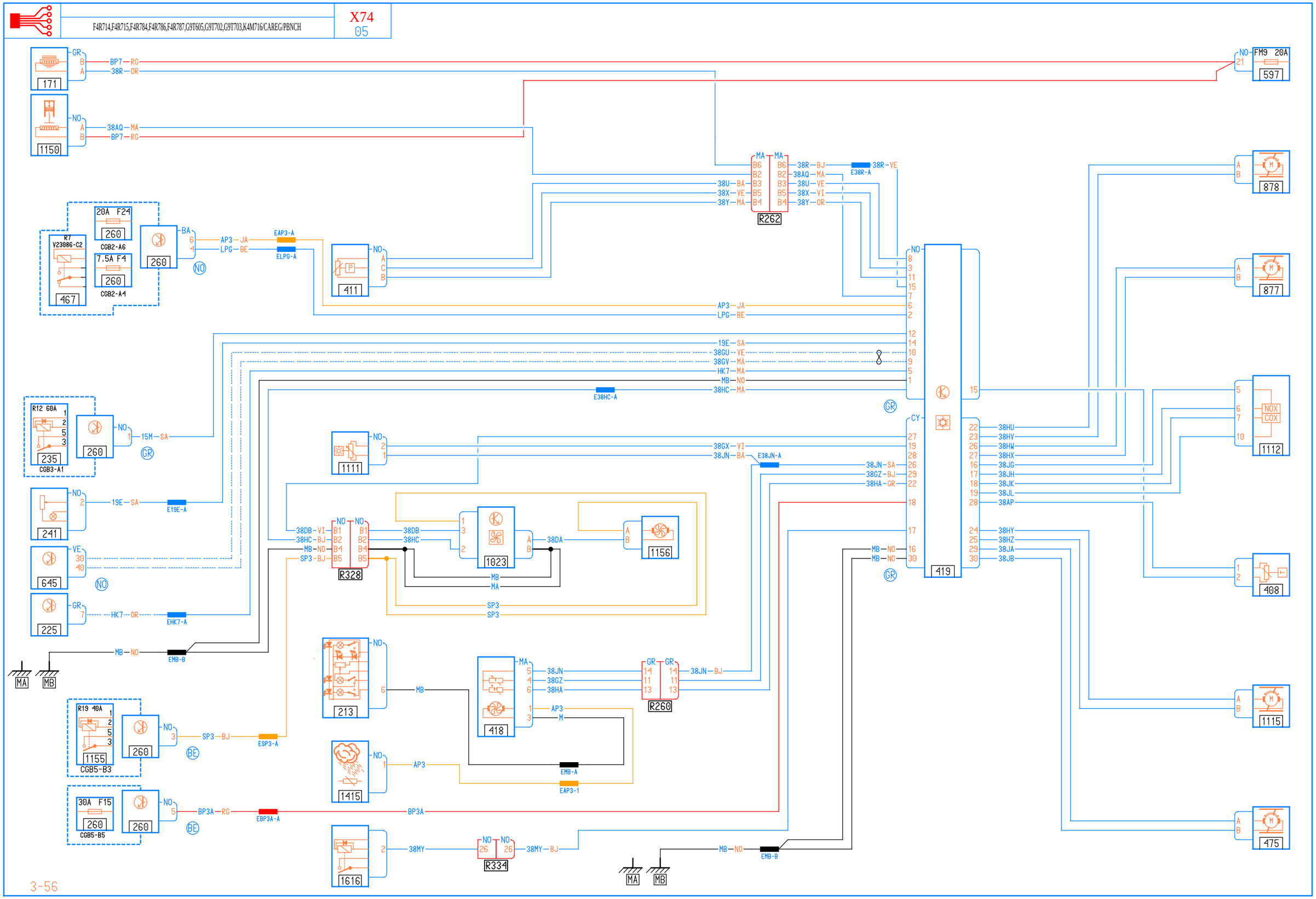
F4R714,F4R715,F4R784,F4R786,F4R787,G9T605,G9T702,G9T703,K4M716/CAREG/PBNCH
X74
05
171
1150
FM9 20A
597
878
877
1112
408
1115
475
R262
R260
R328
R334
419
411
1111
1023
1156
213
418
1415
1616
467
235
241
645
225
R7
V23086-C2
20A F24
7.5A F4
CGB2-A6
CGB2-A4
R12 60A
CGB3-A1
R19 40A
1155
CGB5-B3
30A F15
CGB5-B5
NOX
COX
MA
MB
3-56