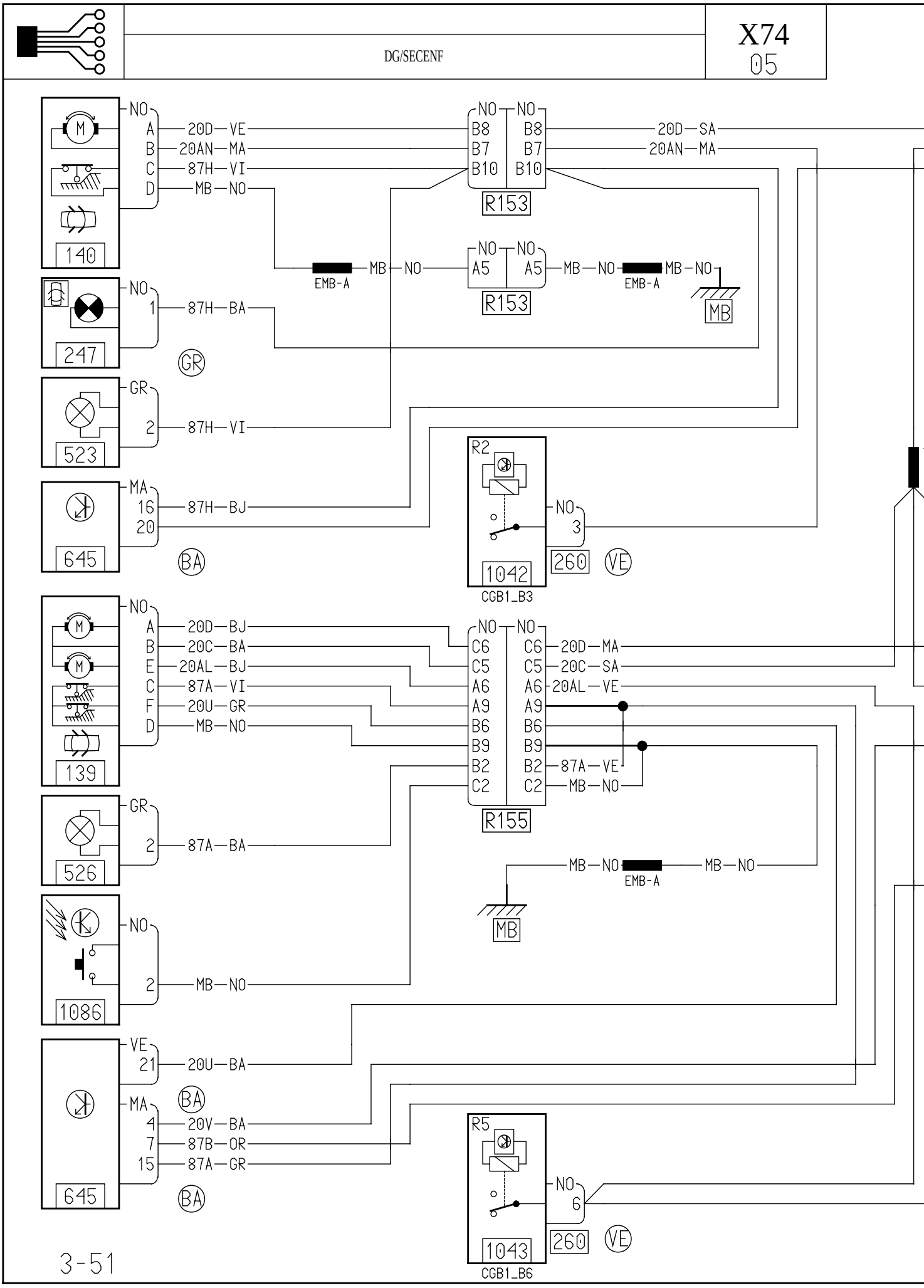
140
NO
A 20D—VE
B 20AN—MA
C 87H—VI
D MB—NO
R153
NO NO
B8 B8 20D—SA
B7 B7 20AN—MA
B10 B10
EMB-A
MB NO
A5 A5 MB—NO
EMB-A
MB—NO
MB
247
NO
1 87H—BA
GR
523
GR
2 87H—VI
645
MA
16 87H—BJ
20
BA
R2
1042
CGB1_B3
NO
3
260
VE
139
NO
A 20D—BJ
B 20C—BA
E 20AL—BJ
C 87A—VI
F 20U—GR
D MB—NO
R155
NO NO
C6 C6 20D—MA
C5 C5 20C—SA
A6 A6 20AL—VE
A9 A9
B6 B6
B9 B9
B2 B2 87A—VE
C2 C2 MB—NO
526
GR
2 87A—BA
MB—NO
EMB-A
MB—NO
MB
1086
NO
2 MB—NO
645
VE
21 20U—BA
BA
MA
4 20V—BA
7 87B—OR
15 87A—GR
BA
R5
1043
CGB1_B6
NO
6
260
VE

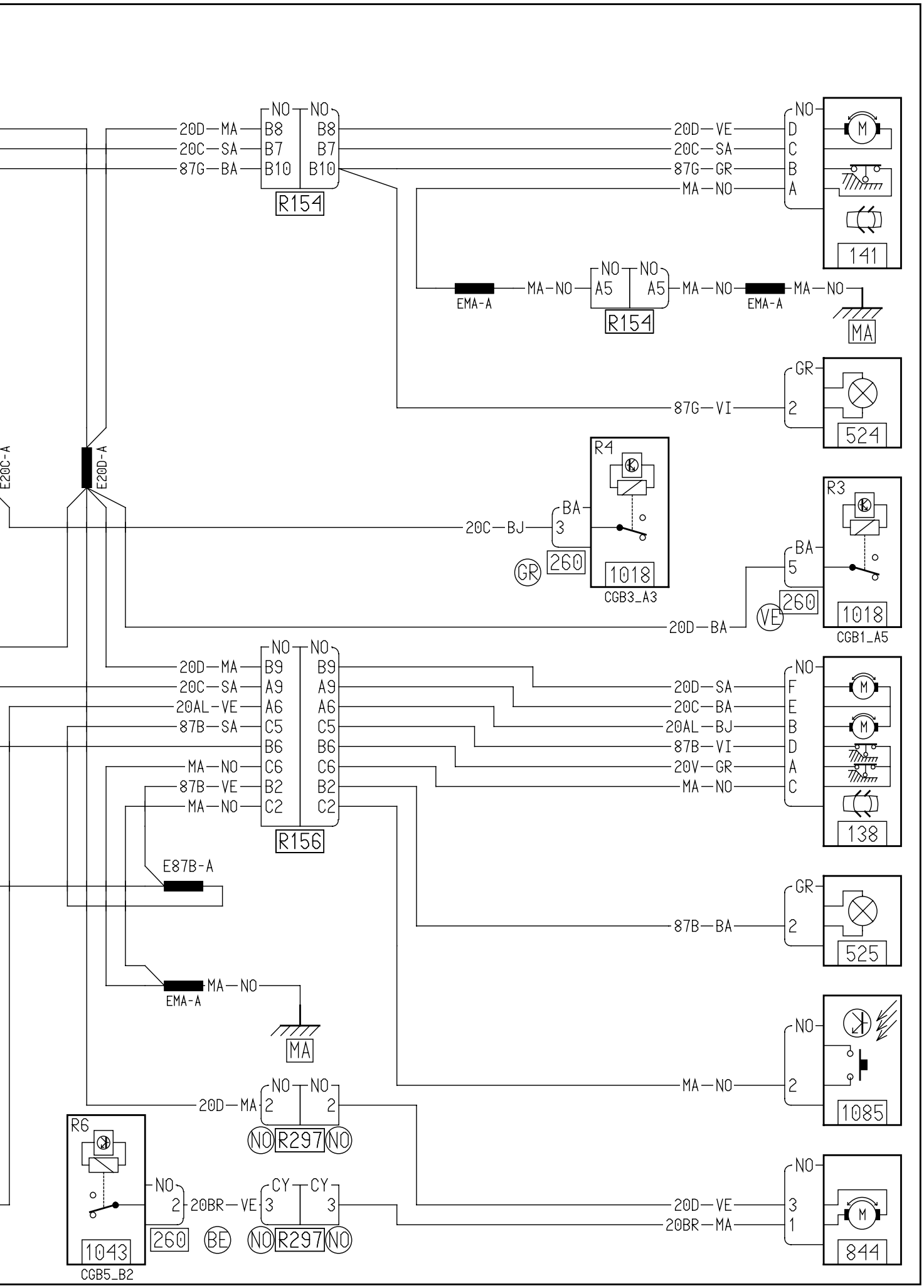
R154
NO NO
20D—MA B8 B8
20C—SA B7 B7
87G—BA B10 B10
20D—VE D
20C—SA C
87G—GR B
MA—NO A
141
EMA-A
MA—NO
A5 A5
MA—NO
EMA-A
MA—NO
MA
87G—VI
GR
2
524
E20C-A
E20D-A
20C—BJ
BA
3
260
GR
R4
1018
CGB3_A3
R3
BA
5
260
VE
1018
CGB1_A5
20D—BA
R156
20D—MA B9 B9
20C—SA A9 A9
20AL-VE A6 A6
87B—SA C5 C5
B6 B6
MA—NO C6 C6
87B—VE B2 B2
MA—NO C2 C2
20D—SA F
20C—BA E
20AL—BJ B
87B—VI D
20V—GR A
MA—NO C
138
E87B-A
87B—BA
GR
2
525
EMA-A
MA—NO
MA
MA—NO
2
1085
20D—MA
NO NO
2 2
NO R297 NO
R6
NO
2
20BR—VE
CY CY
3 3
260
BE
NO R297 NO
1043
CGB5_B2
20D—VE
20BR—MA
3
1
844