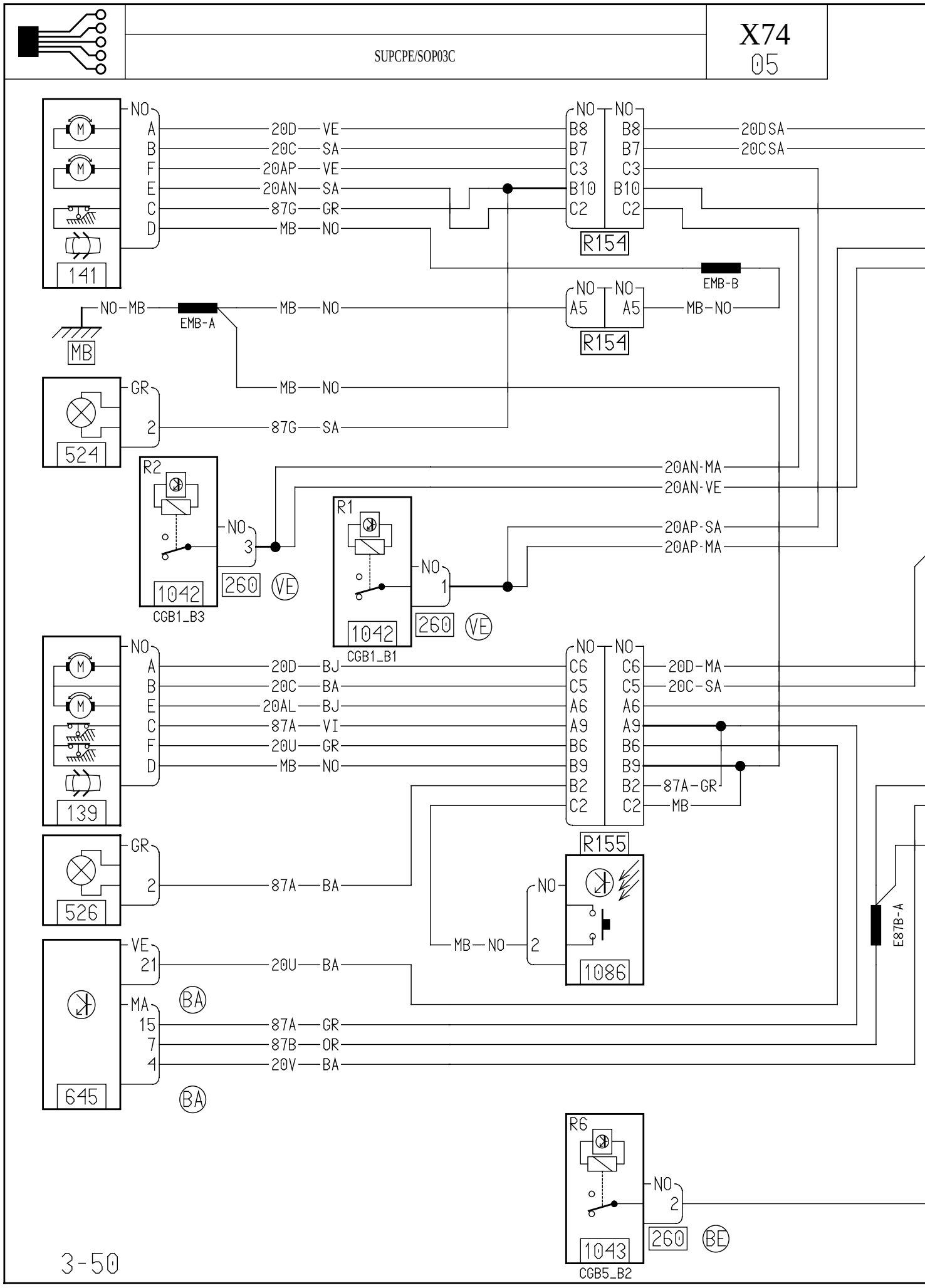
141
NO
A
B
F
E
C
D
20D VE
20C SA
20AP VE
20AN SA
87G GR
MB NO
R154
B8
B7
C3
B10
C2
20DSA
20CSA
EMB-B
A5
MB-NO
NO-MB
EMB-A
MB
524
GR
2
87G SA
R2
1042
CGB1_B3
3
260
VE
20AN-MA
20AN-VE
R1
CGB1_B1
1
20AP-SA
20AP-MA
139
20D BJ
20C BA
20AL BJ
87A VI
20U GR
C6
C5
A6
A9
B6
B9
B2
20D-MA
20C-SA
87A-GR
526
87A BA
R155
1086
E87B-A
645
VE
21
20U BA
MA
15
7
4
87A GR
87B OR
20V BA
BA
R6
1043
CGB5_B2
BE

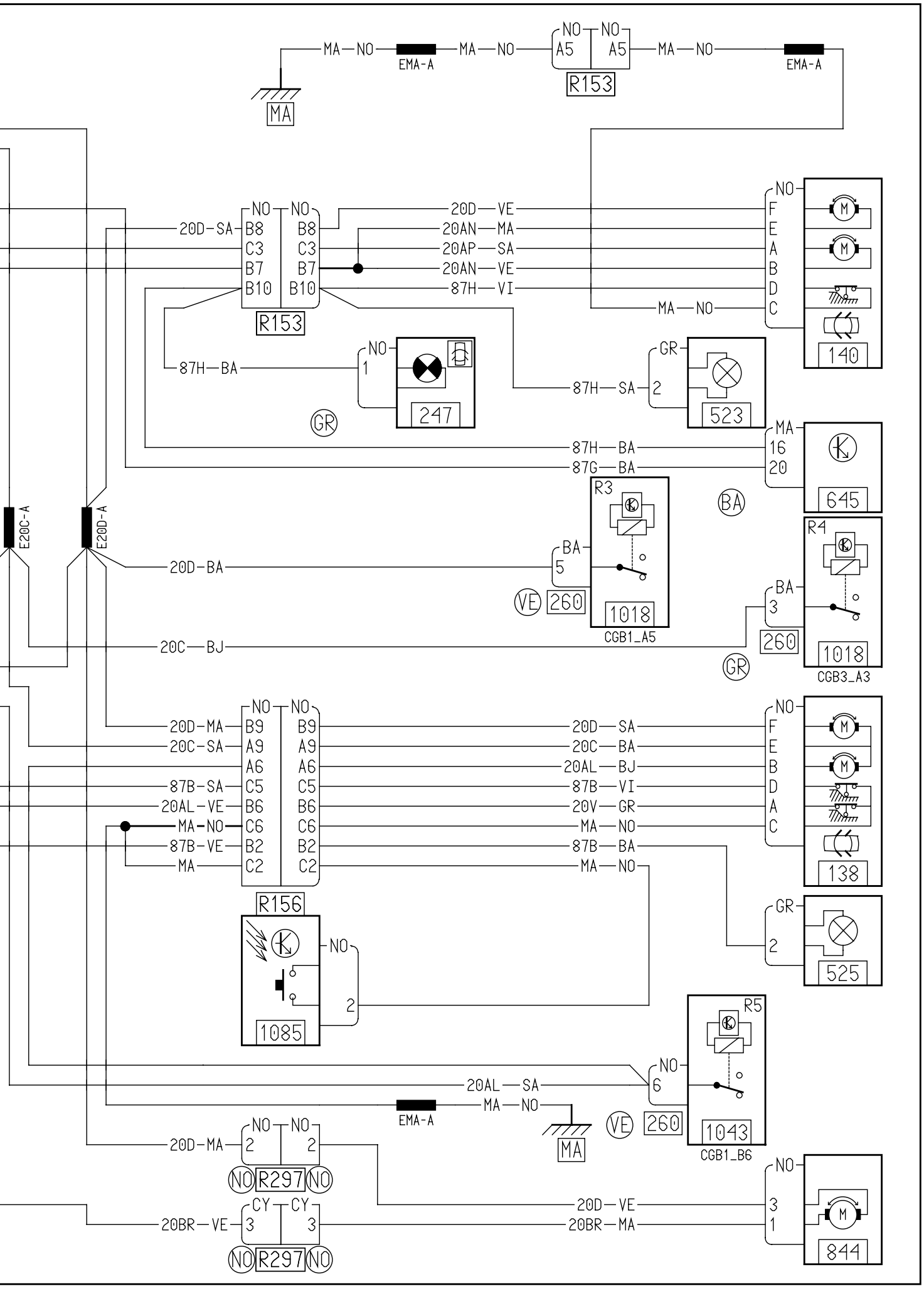
MA
MA—NO
EMA-A
MA—NO
NO NO
A5 A5
R153
MA—NO
EMA-A
20D-SA
NO NO
B8 B8
C3 C3
B7 B7
B10 B10
R153
20D—VE
20AN—MA
20AP—SA
20AN—VE
87H—VI
MA—NO
NO
F
E
A
B
D
C
140
87H—BA
NO
1
247
GR
87H—SA
GR
2
523
87H—BA
87G—BA
MA
16
20
645
BA
E20C-A
E20D-A
20D-BA
BA
5
VE
260
R3
1018
CGB1_A5
R4
BA
3
260
1018
CGB3_A3
20C—BJ
GR
20D-MA
20C-SA
87B-SA
20AL-VE
MA-NO
87B-VE
MA
NO NO
B9 B9
A9 A9
A6 A6
C5 C5
B6 B6
C6 C6
B2 B2
C2 C2
R156
1085
20D—SA
20C—BA
20AL—BJ
87B—VI
20V—GR
MA—NO
87B—BA
MA—NO
NO
F
E
B
D
A
C
138
GR
2
525
R5
NO
6
20AL—SA
MA—NO
EMA-A
MA
VE
260
1043
CGB1_B6
20D-MA
NO NO
2 2
NO R297 NO
20BR—VE
CY CY
3 3
NO R297 NO
20D—VE
20BR—MA
NO
3
1
844