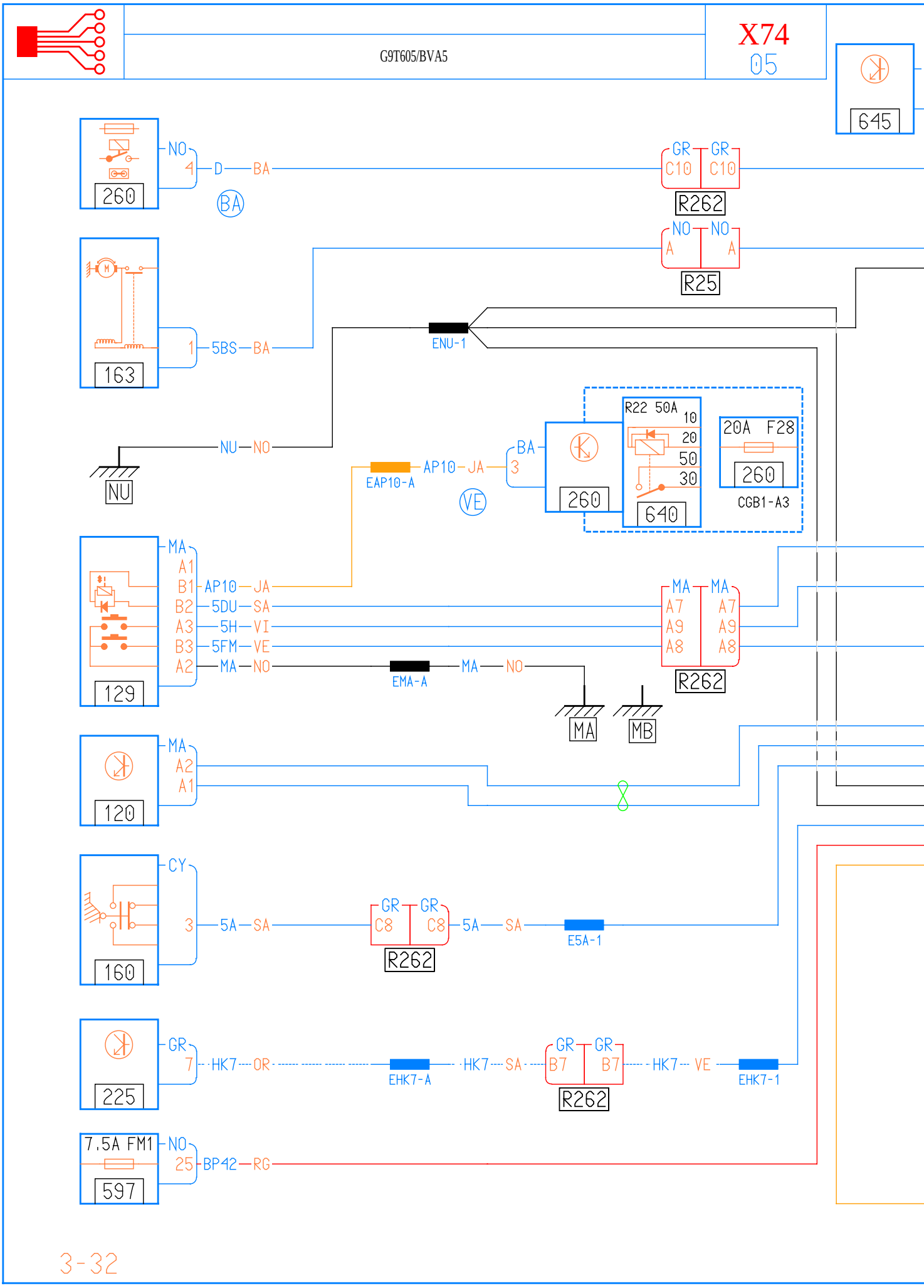
645
260
NO
4
D
BA
BA
GR
C10
GR
C10
R262
NO
A
NO
A
R25
163
1
5BS
BA
ENU-1
NU
NU
NO
EAP10-A
AP10
JA
BA
3
VE
260
R22 50A
10
20
50
30
640
20A F28
260
CGB1-A3
129
MA
A1
B1
AP10
JA
B2
5DU
SA
A3
5H
VI
B3
5FM
VE
A2
MA
NO
EMA-A
MA
NO
MA
A7
A9
A8
MA
A7
A9
A8
R262
MA
MB
120
MA
A2
A1
160
CY
3
5A
SA
GR
C8
GR
C8
R262
5A
SA
E5A-1
225
GR
7
HK7
OR
EHK7-A
HK7
SA
GR
B7
GR
B7
R262
HK7
VE
EHK7-1
7.5A FM1
597
NO
25
BP42
RG

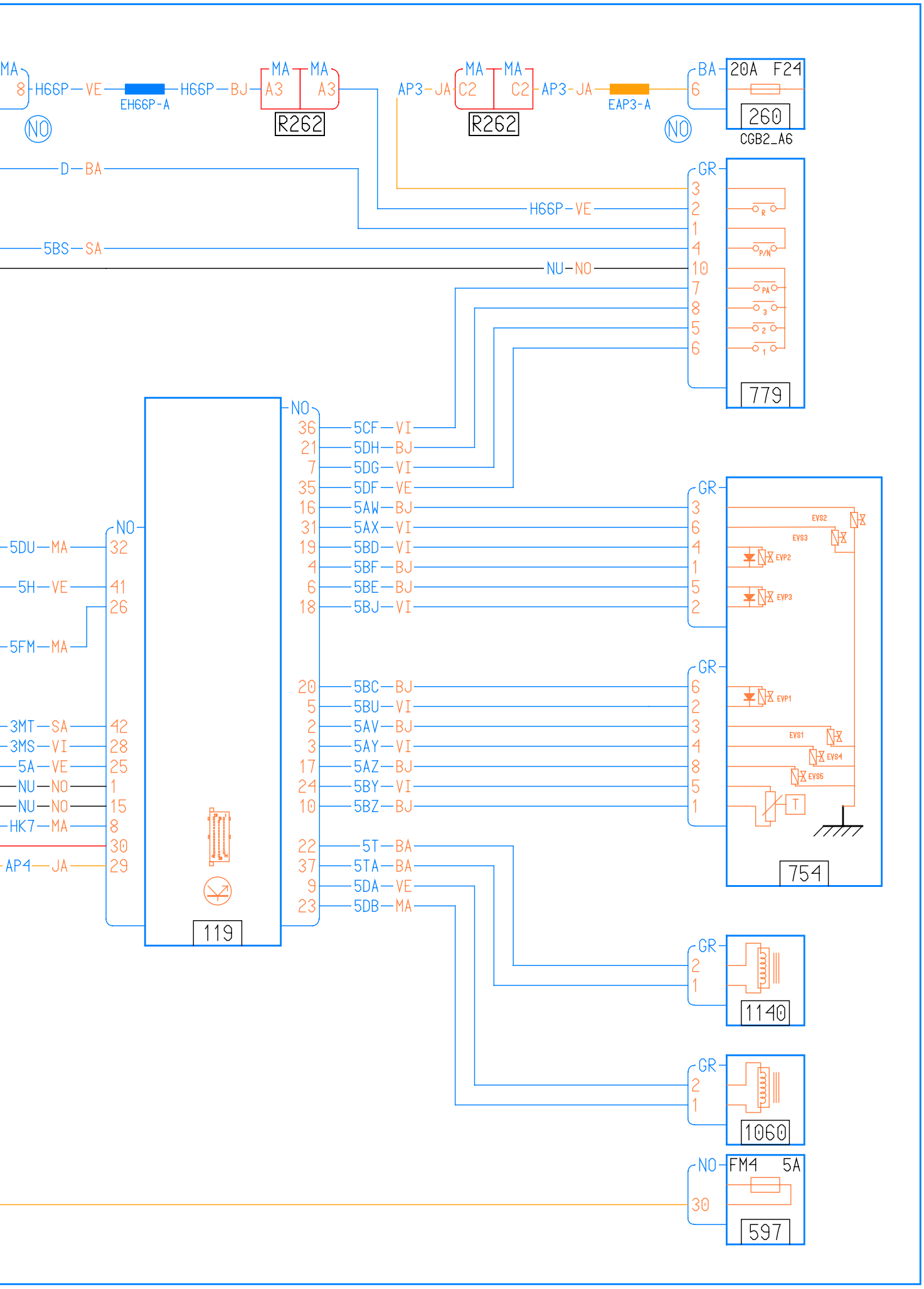
MA
8
H66P—VE
EH66P-A
H66P—BJ
MA
A3
MA
A3
R262
AP3—JA
MA
C2
MA
C2
R262
AP3—JA
EAP3-A
BA
6
20A F24
260
CGB2_A6
NO
NO
D—BA
GR
3
2
1
4
10
7
8
5
6
H66P—VE
5BS—SA
NU—NO
R
P/N
PA
3
2
1
779
NO
36
21
7
35
16
31
19
4
6
18
5CF—VI
5DH—BJ
5DG—VI
5DF—VE
5AW—BJ
5AX—VI
5BD—VI
5BF—BJ
5BE—BJ
5BJ—VI
GR
3
6
4
1
5
2
EVS2
EVS3
EVP2
EVP3
5DU—MA
5H—VE
5FM—MA
NO
32
41
26
20
5
2
3
17
24
10
5BC—BJ
5BU—VI
5AV—BJ
5AY—VI
5AZ—BJ
5BY—VI
5BZ—BJ
GR
6
2
3
4
8
5
1
EVP1
EVS1
EVS4
EVS5
T
3MT—SA
3MS—VI
5A—VE
NU—NO
NU—NO
HK7—MA
AP4—JA
42
28
25
1
15
8
30
29
22
37
9
23
5T—BA
5TA—BA
5DA—VE
5DB—MA
754
119
GR
2
1
1140
GR
2
1
1060
NO
30
FM4 5A
597