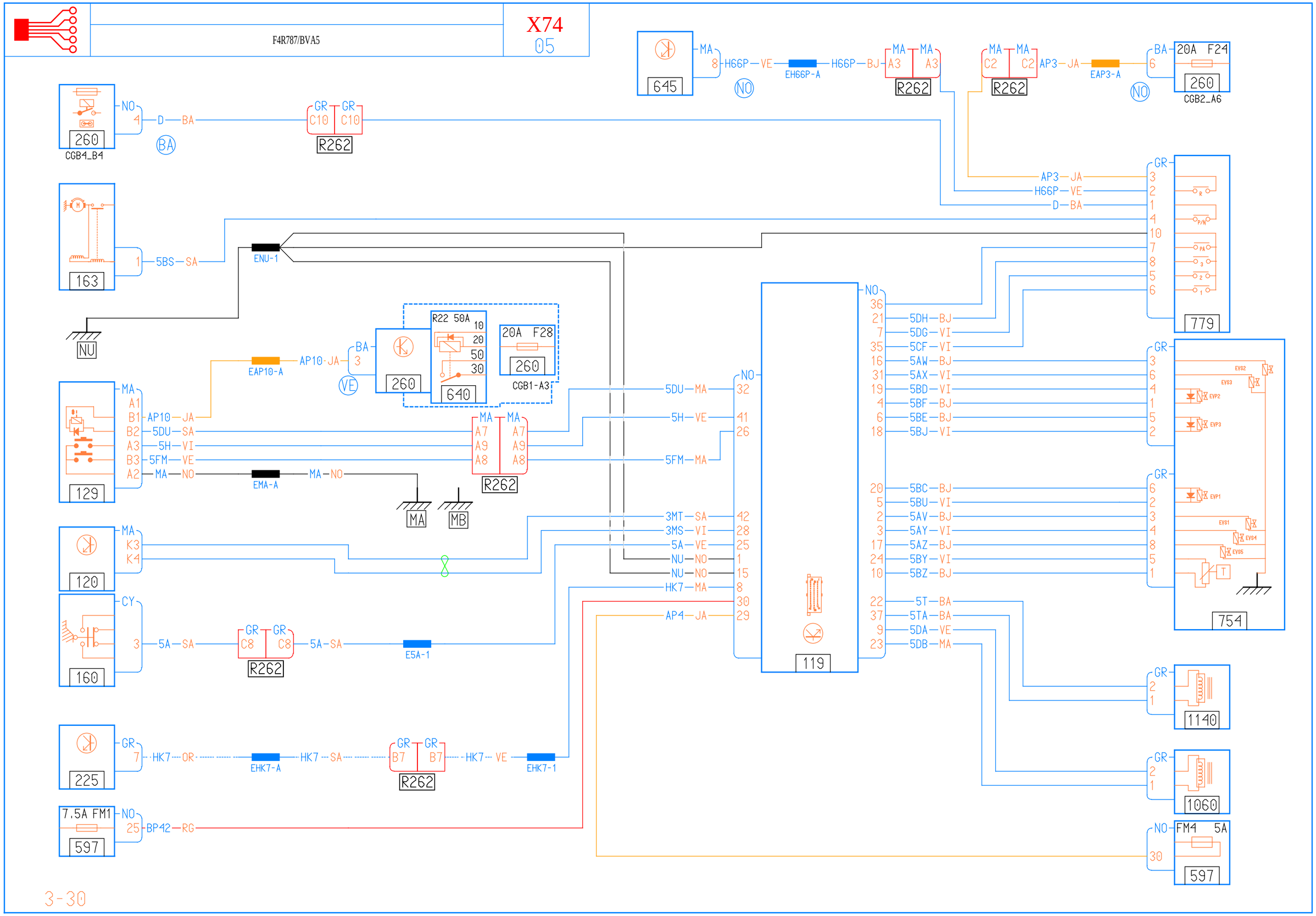
F4R787/BVA5
X74
05
645
H66P
VE
EH66P-A
BJ
R262
AP3
JA
EAP3-A
20A F24
260
CGB2_A6
260
CGB4_B4
BA
D
163
5BS
SA
ENU-1
NU
EAP10-A
AP10-JA
R22 50A
640
20A F28
CGB1-A3
129
AP10
5DU
5H
5FM
EMA-A
MA
MB
120
160
5A
E5A-1
225
HK7
OR
EHK7-A
EHK7-1
7.5A FM1
597
BP42
RG
3MT
3MS
HK7
AP4
119
5DH
5DG
5CF
5AW
5AX
5BD
5BF
5BE
5BJ
5BC
5BU
5AV
5AY
5AZ
5BY
5BZ
5T
5TA
5DA
5DB
779
754
1140
1060
FM4 5A